M561-00-880
Issue C Original

Instruction Manual

iXH, iXL and pXH Dry Pumping Systems

EDWARDS

WWW.EDWARDSVACUUM.COM

iXH and pXH Dry Pumping Systems

A	C	X	X	X	X	X	X	X	X	X	0

Booster Size

Low Voltage	High Voltage
0 = None	A = None
1 = 600G	B = 600G
2 = r	C = r
3 = 1200	D = 1200
4 = 1800	E = 1800
5 = 3000	F = 3000
6 = 4500	G = 4500
7 = 6000	H = 6000

TMS System

0 = Standard
1 = T-Variant
2 = T-Variant + heated booster
3 = r
4 = r
5 = r

Exhaust

0 = r
1 = Standard without check valve.
2 = r
3 = Standard with check valve.

Seals

0 = r
1 = r
2 =Standard

Pump Motor

0 = None
1 = 4.5 kW
2 = 7.5 kW
3 = 11 kW

Dry Pump

Standard	Harsh
0 = None (pXH)	A = 100
1 = 100	B = 200
2 = 200	C = 300
3 = 300	D = 450
4 = r	E = 500
5 = r	
6 = r	
7 = r	

Gas Module

0 = None (pXH)
1 = Loadlock (4 slm flow)
2 = Single Mode (44 slm flow)
3 = Single Mode (96 slm flow)
4 = Single Mode (133 slm flow)
5 = Single Mode (204 slm flow)
6 = Single Mode + (44 slm flow)
7 = Single Mode + (96 slm flow)
8 = Single Mode + (133 slm flow)
9 = Single Mode + (204 slm flow)
A = Multi Mode (44 slm flow)
B = Multi Mode (96 slm flow)
C = Multi Mode (133 slm flow)
D = Multi Mode (204 slm flow)

Booster Motor

0 = None
1 = 1.9 kW
2 = 4.5 kW
3 = 7.5 kW
4 = r

Special Features

0 = None
1 = Application Specific
2 = Application Specific
3 = Application Specific
4 = Application Specific
5 = Application Specific
6 = Application Specific
7 = Application Specific
8 = Application Specific
9 = Application Specific

Where r = reserved for future use

iXL Dry Pumping Systems

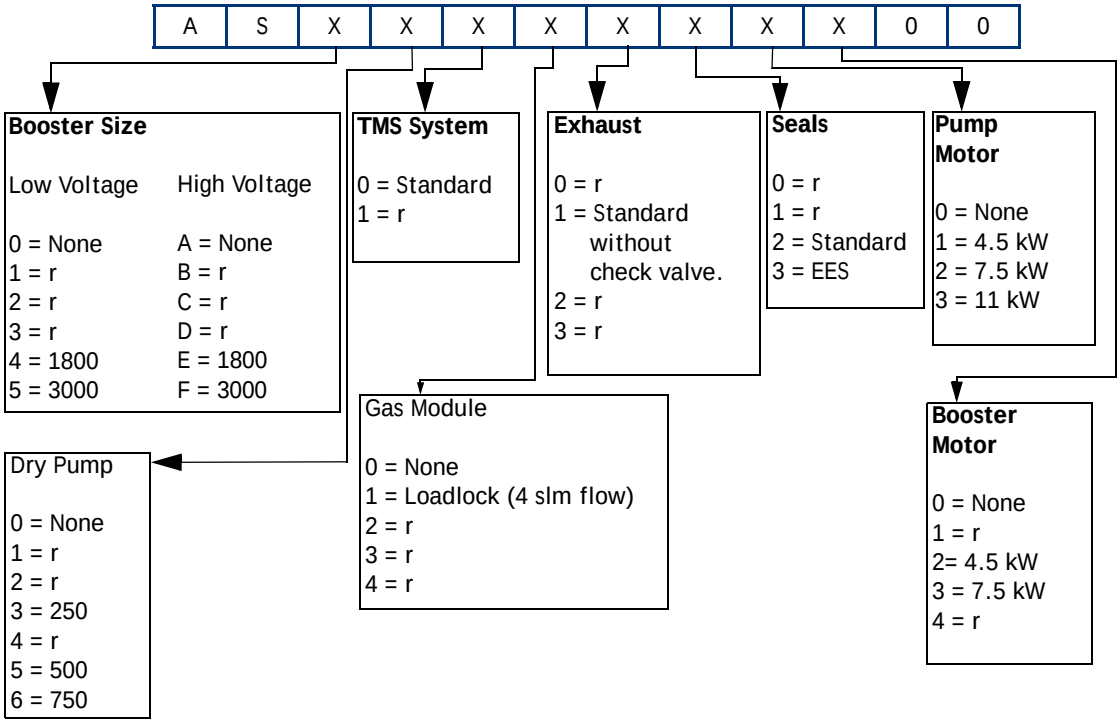

Where r = reserved for future use

Declaration of Conformity

We, Edwards Limited,
Crawley Business Quarter,
Manor Royal,
Crawley,
West Sussex RH10 9LW, UK

declare under our sole responsibility, as manufacturer and person within the EU authorised to assemble the technical file, that the product(s)

	Low Volt Systems (200 - 230V)	*High Volt Systems (380 - 460V)*
iXH100	AC010xy21000	ACA10xy21000
iXH200H	AC0B0xy22000	ACAB0xy22000
iXH610	AC110xy21100	ACB10xy21100
iXH1210	AC310xy21200	ACD10xy21200
iXH1210H	AC3A0xy22200	ACDA0xy22200
iXH1210HT	AC3A1xy22200	ACDA1xy22200
iXH1220H	AC3B0xy22200	ACDB0xy22200
iXH1220HT	AC3B1xy22200	ACDB1xy22200
iXH1220HTX	AC3B2xy22200	ACDB2xy22200
iXH1820	AC420xy22200	ACE20xy22200
iXH1820H	AC4B0xy22200	ACEB0xy22200
iXH1820T	AC421xy22200	ACE21xy22200

Where x = 1, 2, 3, 4, 5, 6, 7, 8, 9, A, B, C or D depending on gas module type
Where y=1 means 'no check valve' and y=3 means 'check valve supplied'

to which this declaration relates is in conformity with the following standard(s) or other normative document(s):

EN1012-2: 1997	Compressor and Vacuum Pumps Safety Requirements; Part 2 - Vacuum Pumps.
EN61010-1: 2010	Safety Requirements for Electrical Equipment for Measurement, Control and Laboratory Use; Part 1 – General Requirements.
EN 61326-1: 2006	Electrical equipment for measurement, control and laboratory use - EMC requirements (Industrial Location Immunity – Class A Emissions)
EN50581:2012	Technical Documentation for the Assessment of Electrical and Electronic Products with respect to the Restriction of Hazardous Substances

ANSI/UL 61010-1 and CAN/CSA-C22.2 No. 61010-1, 2nd Edition July 12, 2004, including revision July 22, 2005 - Safety Requirements for Electrical Equipment for Measurement, Control and Laboratory Use, Part 1: General Requirements

SEMI S2-0709 - Environmental, Health, and Safety Guideline for Semiconductor Manufacturing Equipment

when installed in accordance with the instruction manual supplied with the pump, following the provisions of:

2006/95/EC	Low Voltage Directive.
2004/108/EC	Electromagnetic Compatibility Directive.
2006/42/EC	Machinery Safety Directive.
2011/65/EU*	Restriction of Certain Hazardous Substances (RoHS) Directive

** i.e. The product(s) contain less than - 0.1wt% for hexavalent chromium, lead, mercury, PBB and PBDE; 0.01wt% for cadmium - in homogeneous materials (subject to the exemptions allowed by the Directive). The RoHS Directive does not legally apply to industrial vacuum equipment until July 2019 (July 2017 for instruments).*

Note: This declaration covers all product serial numbers from the date this Declaration was signed onwards.

Mr Mark Hope, Global Technical Support Manager

22.10.2013, Burgess Hill

Date and Place

This product has been manufactured under a quality system certified to ISO9001:2008

P200-02-320 Issue J

Declaration of Conformity

We, Edwards Limited,
Crawley Business Quarter
Manor Royal,
Crawley,
West Sussex RH10 9LW, UK

declare under our sole responsibility, as manufacturer and person within the EU authorised to assemble the technical file, that the product(s)

	Low Volt Systems (200-230V)	*High Volt Systems (380-460V)*
iXH3030	AC530xy22300	ACF30xy22300
iXH3030T	AC531xy22300	ACF31xy22300
iXH3030TX	AC532xy22300	ACF32xy22300
iXH3045H	AC5D0xy23310	ACFD0xy23310
iXH4545HT	AC6D1xy23300	ACGD1xy23300
iXH4545HT	-	ACGD1B123390
iXH6045H	AC7D0xy23300	ACHD0xy23300
iXH6045H	AC7D02123310	ACHD02123310
iXH6045HT	AC7D1xy23300	ACHD1xy23300
iXH450H	AC0D0xy23000	ACAD0xy23000
pXH4500	AC6000120300	ACG000120300
pXH4500	-	ACG000120310
pXH6000	AC7000120300	ACH000120300
iXL500Q	AS450zy23300	ASE50zy23300
iXL500R	AS550zy23300	ASF50zy23300

Where x = 1, 2, 3, 4, 5, 6, 7, 8, 9, A, B, C or D depending on gas module type
Where y = 1 means 'no check valve' and y=3 means 'check valve supplied'
Where z = 1, 2, 3, 5, A or B depending on gas module type for iXL

to which this declaration relates is in conformity with the following standard(s) or other normative document(s)

EN1012-2: 1997	Compressor and Vacuum Pumps Safety Requirements. Part 2 - Vacuum Pumps
EN61010-1: 2010	Safety Requirements for Electrical Equipment for Measurement, Control and Laboratory Use. Part 1 – General Requirements.
EN 61326-1: 2006	Electrical equipment for measurement, control and laboratory use - EMC requirements (Industrial Location Immunity – Class A Emissions)
EN50581:2012	Technical Documentation for the Assessment of Electrical and Electronic Products with respect to the Restriction of Hazardous Substances

ANSI/UL 61010-1 and CAN/CSA-C22.2 No. 61010-1, 2nd Edition July 12, 2004, including revision July 22, 2005 - Safety Requirements for Electrical Equipment for Measurement, Control and Laboratory Use, Part 1: General Requirements

SEMI S2-0709 - Environmental, Health, and Safety Guideline for Semiconductor Manufacturing Equipment

when installed in accordance with the instruction manual supplied with the pump, following the provisions of:

2006/95/EC	Low Voltage Directive
2004/108/EC	Electromagnetic Compatibility Directive
2006/42/EC	Machinery Safety Directive
2011/65/EU*	Restriction of Certain Hazardous Substances (RoHS) Directive

** i.e. The product(s) contain less than - 0.1wt% for hexavalent chromium, lead, mercury, PBB and PBDE; 0.01wt% for cadmium - in homogeneous materials (subject to the exemptions allowed by the Directive). The RoHS Directive does not legally apply to industrial vacuum equipment until July 2019 (July 2017 for instruments).*

Note: This declaration covers all product serial numbers from the date this Declaration was signed onwards.

22.10.2013, Burgess Hill

Mr Mark Hope, Global Technical Support Manager — *Date and Place*

This product has been manufactured under a quality system certified to ISO9001:2008

P200-02-720 Issue K

Declaration of Conformity

We, Edwards Limited,
Crawley Business Quarter,
Manor Royal,
Crawley,
West Sussex, RH10 9LW, UK

declare under our sole responsibility, as manufacturer and person within the EU authorised to assemble the technical file, that the product(s)

	Low Volt Systems (200-230V)	*High Volt Systems (380-460V)*
iXH500H	AC0E0xy23000	ACAE0xy23000
iXH3050H	AC5E0xy23310	ACFE0xy23310
iXH3050HTX	AC5E2xy23300	ACFE2xy23300
iXH4550HT	AC6E1xy23300	ACGE1xy23300
iXH6050H	AC7E0xy23300	ACHE0xy23300
iXH6050HT	AC7E1xy23300	ACHE1xy23300

Where x = 1, 2, 3, 4, 5, 6, 7, 8, 9, A, B, C or D depending on gas module type
Where y = 1 means 'no check valve' and y = 3 means 'check valve supplied'

to which this declaration relates is in conformity with the following standard(s) or other normative document(s)

EN1012-2:1996, A1: 2009	Compressors and Vacuum Pumps. Safety Requirements. Part 2 - Vacuum Pumps.
EN61010-1: 2010	Safety Requirements for Electrical Equipment for Measurement, Control and Laboratory Use. Part 1 - General Requirements.
EN 61326-1: 2006	Electrical equipment for measurement, control and laboratory Use - EMC requirements. (Industrial Location Immunity - Class A Emissions)
EN50581:2012	Technical Documentation for the Assessment of Electrical and Electronic Products with respect to the Restriction of Hazardous Substances

ANSI/UL 61010-1 and CAN/CSA-C22.2 No. 61010-1, 2nd Edition July 12, 2004, including revision July 22, 2005 – Safety Requirements for Electrical Equipment for Measurement, Control and Laboratory Use - Part 1: General Requirements

and fulfils all the relevant provisions of

2006/42/EC	Machinery Directive
2006/95/EC	Low Voltage Directive
2004/108/EC	Electromagnetic Compatibility (EMC) Directive
2011/65/EU*	Restriction of Certain Hazardous Substances (RoHS) Directive

** i.e. The product(s) contain less than - 0.1wt% for hexavalent chromium, lead, mercury, PBB and PBDE; 0.01wt% for cadmium - in homogeneous materials (subject to the exemptions allowed by the Directive). The RoHS Directive does not legally apply to industrial vacuum equipment until July 2019 (July 2017 for instruments).*

Note: This declaration covers all product serial numbers from the date this Declaration was signed onwards.

Mr Mark Hope, Global Technical Support Manager

22.10.2013, Burgess Hill

Date and Place

This product has been manufactured under a quality system certified to ISO9001:2008

P200-06-000 Issue C

Declaration of Conformity

We, Edwards Limited,
Crawley Business Quarter,
Manor Royal,
Crawley,
West Sussex RH10 9LW, UK

declare under our sole responsibility, as manufacturer and person within the EU authorised to assemble the technical file, that the product(s)

	Low Volt Systems (200-230V)	*High Volt Systems (380-460V)*
iXL250Q	AS43001x2300	ASE3001x2300
iXL750Q	AS46001x4300	ASE6001x4300
iXL750R	AS56001x4300	ASF6001x4300

Where x = 2 means 'standard booster oilbox evacuation' and x=3 means 'external booster oilbox evacuation'

to which this declaration relates is in conformity with the following standard(s) or other normative document(s)

EN1012-2: 1997	Compressor and Vacuum Pumps Safety Requirements. Part 2 - Vacuum Pumps
EN61010-1: 2010	Safety Requirements for Electrical Equipment for Measurement, Control and Laboratory Use. Part 1 – General Requirements.
EN 61326-1: 2006	Electrical equipment for measurement, control and laboratory use - EMC requirements (Industrial Location Immunity – Class A Emissions)

ANSI/UL 61010-1 and CAN/CSA-C22.2 No. 61010-1, 2nd Edition July 12, 2004, including revision July 22, 2005 - Safety Requirements for Electrical Equipment for Measurement, Control and Laboratory Use, Part 1: General Requirements

when installed in accordance with the instruction manual supplied with the pump,
following the provisions of:

2006/95/EC	Low Voltage Directive
2004/108/EC	Electromagnetic Compatibility Directive
2006/42/EC	Machinery Safety Directive

Note: This declaration covers all product serial numbers from the date this Declaration was signed onwards.

Mr Mark Hope, Global Technical Support Manager

22.10.2013, Burgess Hill

Date and Place

This product has been manufactured under a quality system certified to ISO9001:2008

P200-06-620 Issue B

The Chinese regulatory requirement on the Control of Pollution Caused by Electronic Information Products No. 39 (also known as 'China RoHS') mandates that manufacturers of certain categories of electronic products sold in China after 1st March 2007 –

- Mark the product and packaging
- Define the Product's Environment Protection Use Period (EPUP)
- Provide a Materials Content Declaration.

Product Labels

Product	Product Label	Meaning
All iXH, iXL500 and pXH models	20	Indicates toxic or hazardous substance contained in at least one of the homogeneous materials used for this part is above the limit requirement in SJ/T11363-2006. Environmental Protection Use Period is 20 years.

Packaging information

Pallet	Overshipper	Protection Pieces	Support Braces
NW	CB	5 PP	FE
Recyclable Natural Wood	Recyclable Cardboard	Recyclable Polypropylene	Recyclable Mild Steel

Environment Protection Use Period (EPUP)

This is the period in years during which the toxic or hazardous substances or elements contained in this product will not leak or mutate under normal operating conditions so that the use of such electronic information products will not result in any severe environmental pollution, any bodily injury or damage to any assets.

The Environmental Protection Use Period is **20** years for this product.

For the purposes of EPUP, normal operating conditions are considered to be use in accordance with the product's instruction manual.

Materials Content Declaration for all iXH, iXL & pXH models

Part name	Toxic or Hazardous Substances and Elements					
	Lead (Pb)	Mercury (Hg)	Cadmium (Cd)	Hexavalent Chromium (Cr (VI))	Poly brominated biphenyls (PBB)	Poly brominated diphenyl ethers (PBDE)
Motor (Mechanical Booster)	O	O	O	O	O	O
Motor (pump)	O	O	O	O	O	O
Pump & Booster	O	O	O	O	O	O
Electronics and Controls	O	O	X	O	O	O
Cooling System	O	O	O	O	O	O
Purge System	O	O	O	O	O	O

O: Indicates that this toxic or hazardous substance contained in all of the homogeneous materials for this part is below the limit requirement in SJ/T11363-2006.
X: Indicates that this toxic or hazardous substance contained in at least one of the homogeneous materials used for this part is above the limit requirement in SJ/T11363-2006.

Contents

Section Page

1 Introduction 1

1.1 Scope and definitions 1
1.2 Applications 2
1.3 Description 2
1.4 Priority of control 2
1.5 Active utility control 3

2 Technical data 5

2.1 General technical data 5
2.2 Performance data 7
2.3 Loading data 8
2.4 Nitrogen purge data 9
2.5 Electrical data 11
2.6 Cooling-water data 17
2.7 T variants 20
2.8 Tracer gas analysis 20

3 Installation 23

3.1 Locate the dry pumping system 24
3.2 Lubrication 25
3.3 Connect the dry pumping system to your vacuum/exhaust system 25
3.4 Connect to your factory extraction system (optional) 27
3.5 Connect the nitrogen supply 28
3.5.1 Flammable/pyrophoric materials 28
3.5.2 Gas purges 29
3.6 Leak-test the system 29
3.7 Electrical supply 29
3.7.1 Mains supply cable connection 31
3.8 Connect an additional RF earth (ground) (optional) 35
3.9 Connect to your emergency stop circuit 35
3.10 Connect and set up the cooling-water 36
3.11 Accessories 37
3.12 Commission the system 37
3.13 Install additional safety equipment 38

4 Operation 39

4.1 Start-up 39
4.1.1 MicroTIM operation 40
4.1.2 PDT operation 40
4.1.3 Front panel control operation 40
4.2 Status indicators 40
4.3 Manual shut-down 41
4.3.1 Shut-down modes 41
4.3.2 MicroTIM operation 41
4.3.3 PDT operation 41
4.3.4 Front panel control operation 41
4.4 Automatic shut-down 42
4.5 Unplanned shut-down and alarms 43
4.6 Emergency stop 44
4.7 Restart the pump after an emergency stop or automatic shut-down 44
4.8 Advanced control and monitoring 44

gea/0179/01/12

© Edwards Limited 2012. All rights reserved.
Edwards and the Edwards logo are trademarks of Edwards Limited.

Contents

5 Maintenance 45

5.1 Safety and maintenance frequency 45
5.2 Relocate the system for maintenance 46
5.3 Draining the cooling water 47
5.4 General maintenance 48
5.5 Inspect the connections, pipelines, cables and fittings 48
5.6 Gas module configuration 49
5.6.1 iXH single mode and single mode+ 49
5.6.2 Multi mode 49
5.6.3 iXL variants 50
5.7 System operating temperature configuration 50

6 Transportation, storage and disposal 51

6.1 Transportation 51
6.2 Storage 51
6.3 Disposal 51

7 Service, spares and accessories 53

7.1 Introduction 53
7.2 Service 53
7.3 Ordering accessories 54

Appendix A1 Pump display terminal 57

A1.1 LEDs 57
A1.2 Pump start / stop and control 57
A1.3 Warning / Alarm display and acknowledgement 58
A1.4 Menus 58
A1.4.1 Normal menu 58
A1.4.2 Status menu 59
A1.4.3 SETUP menu 60
A1.4.4 COMMANDS menu 61
A1.4.5 INV FAULT HIST (Display Inverter Fault History) menu 61
A1.4.6 SOFTWARE VERSION Display menu 62
A1.4.7 FIT ACCESSORY menu 62
A1.4.8 IP Configuration menu 62
A1.4.9 Display attributes menu 63

Appendix A2 Troubleshooting 65

A2.1 Warnings 65
A2.1.1 LED warning indicators 65
A2.1.2 PDT warnings 65
A2.2 Alarms 68
A2.2.1 LED alarm indicators 68
A2.2.2 PDT alarms 68
A2.3 Inverter warnings and alarms 70
A2.4 Other problems 75
A2.4.1 Pump controller communications 75

For return of equipment, complete the HS Forms at the end of this manual.

© Edwards Limited 2012. All rights reserved.
Edwards and the Edwards logo are trademarks of Edwards Limited.

Illustrations

Figure — Page

1 Applications 2
2 The front panel controls 3
3 Front view of pumping system 3
4 The controls/connectors on the rear of the pump 4
5 Centre of gravity and levelling foot loads 9
6 Reduce the effective system footprint 25
7 Connecting the pump inlet 27
8 The Harting Han® K 4/4 cable-mounted connector 32
9 The Harting 100A axial screw module cable-mounted connector 33
10 Customer connection kit - combination low volts iXL750 34
11 Electrical connector locking mechanism 35
A1 Pump display terminal 57

Tables

Table — Page

1 General technical data 5
2 General technical data 6
3 Performance data 7
4 Loading data (refer to Figure 5) 8
5 Nitrogen purge data for iXH and iXL systems 9
6 Gas module types and flows 10
7 Electrical data iXH100 to iXH1820/H/T 11
8 General electrical data 14
9 Electrical connections 15
10 Wire assembly according to VDE 0295 16
11 Water cooling system data 17
12 Cooling water supply temperature 18
13 Water consumption data 19
14 Heater data 20
15 Tracer gas test parameters 20
16 Tracer gas test system parameters 20
17 Worst case test results 21
18 Extraction rates required by system variant 22
19 Alarm actions 42
20 Pump protection sensors 43
21 Dry pump and booster temperature settings 50
22 Accessories 54
23 Seismic bracket kits 55
24 Exhaust check valve kits 55
A1 Pump start control 57
A2 Pump stop and control 58
A3 Normal menu 58
A4 Normal menu 59
A5 Status menu 59
A6 SETUP menu 60
A7 COMMANDS menu 61
A8 GAS VALVES menu 61
A9 INV FAULT HIST (Display Inverter Fault History) menu 61
A10 FIT ACCESSORY menu 62

© Edwards Limited 2012. All rights reserved.
Edwards and the Edwards logo are trademarks of Edwards Limited.

Contents

A11 IP Configuration menu 62
A12 Display attributes menu 63
A13 SELECT LINE (Normal display selection menu) 63
A14 UNITS (Units to display) 63
A15 Warnings 65
A16 Alarms 68
A17 Hexadecimal to digital conversion 70
A18 Inverter alarm codes 71
A19 Inverter warnings codes 72
A20 Inverter diagnostic display text 73

Associated publications

Publication title	Publication number
Vacuum Pump and Vacuum System Safety	P400-40-100
Semiconductor Pumping Application Guide	P411-00-090

Trademark Credits

Han® is a registered trademark of Harting Electric GmbH
EtherCon® is a registered trademark of Neutrik® AG
Fomblin® is a registered trademark of Solvay Solexis SpA

© Edwards Limited 2012. All rights reserved.
Edwards and the Edwards logo are trademarks of Edwards Limited.

1 Introduction

1.1 Scope and definitions

This manual provides installation, operation and maintenance instructions for the Edwards iXH, iXL and pXH dry pumping systems. You must use your pumping system as specified in this manual otherwise the protection provided by the equipment may be impaired.

Read this manual before you install and operate your pump. Important safety information is highlighted as WARNING and CAUTION instructions; you must obey these instructions. The use of WARNINGS and CAUTIONS is defined below.

WARNING

Warnings are given where failure to observe the instruction could result in injury or death to people.

CAUTION

Cautions are given where failure to observe the instruction could result in damage to the equipment, associated equipment and/or process.

The units throughout this manual conform to the SI international system of units of measurement.

The following warning labels are on the pump:

Warning - Refer to accompanying documentation.

Warning - Maximum angle between paired slings

Warning - Risk of electric shock.

Warning - Heavy object.

Warning - Hot surfaces.

Protective earth (ground).

Warning - Moving parts present.

Warning - use protective equipment.

RF earth (ground).

© Edwards Limited 2012. All rights reserved.
Edwards and the Edwards logo are trademarks of Edwards Limited.

The following warnings only appear in this manual:

Warning - Risk of explosion.

Warning - pressurised.

Material Safety Data Sheets for chemicals supplied by Edwards can be obtained by contacting Edwards, or on www.edwardsvacuum.com.

1.2 Applications

iXH, iXL and pXH pumping systems are intended for use on the Semiconductor, Solar and FPD processes shown in Figure 1.

Figure 1 - Applications

iXH, iXL and pXH applications		
ALD	Metal Etch	RTP
HDP-CVD	Metrology	SACVD
Implant Source	Oxide etch	Silicon Etch
Lithography	PECVD	Strip/Ashing
Load lock	PVD Pre-Clean	Transfer
LPCVD	PVD Process	
MOCVD	RTA	

The iXL systems are intended for use on clean duty applications.

If you use the system on an application for which it is not suitable, you may invalidate your warranties. If in doubt, contact Edwards who will advise you as to the suitability of the system for any particular application.

1.3 Description

The iXH dry pump range has been developed to meet the demanding requirements for process pumping solutions in the Semiconductor, Flat Panel and Solar industries. The range sets new standards for harsh process capability, reliability and reduced cost of ownership in low footprint packages.

The iXL pump range has been developed to meet cyclic loadlock duty applications used in the flat panel and solar industries.

The pXH booster systems are not intended for use as stand-alone units. Each system must be backed using a suitable Edwards dry pump selected to match process and performance specifications.

1.4 Priority of control

The pumping system can be controlled by a number of modules: the front control panel (refer to Figure 2), a Pump Display Terminal (PDT), the Edwards System Controller or by the tool through the MicroTIM or one of the serial interfaces. Only one of these can have control of the system at any one time. That is, once one of these has control of the system, control requests from the others are denied.

In addition to the control modules listed above, the pXH proximity booster can control or be controlled by the Edwards backing pump. Contact Edwards for more information on how to control a pXH using an iXH or other Edwards pumping system.

The PDT indicates who is in control. LEDs are also provided on the rear panel, front panel or PDT, which illuminate to indicate 'in control'.

© Edwards Limited 2012. All rights reserved.
Edwards and the Edwards logo are trademarks of Edwards Limited.

1.5 Active utility control

The Active Utility Control (Green Mode) function reduces utility consumption of the system while on stand-by. The Green Mode functionality is controlled by the on/off process signal from the Tool Interface Module. Contact Edwards for advice on application and activation.

Figure 2 - The front panel controls

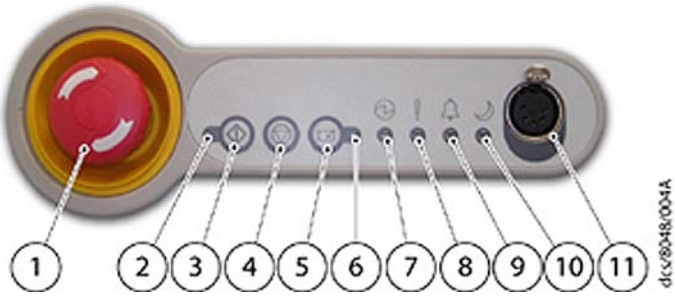

Item	Control/connector identification
1	EMS button
2	Running LED (green)
3	Start button
4	Stop button
5	Local control button
6	Local control LED (green)
7	Power LED (green)
8	Warning LED (amber)
9	Alarm LED (red)
10	Green Mode LED (green)
11	PDT (Pump Display Terminal) connection

Figure 3 - Front view of pumping system

Item	Control/connector identification
1	Front panel control
2	Levelling feet (4 off)
3	Castors (4 off)
4	Seismic bracket (4 off if fitted)
5	Pumped gas inlet connection
6	RF Earth (ground) cable
7	Extraction port
8	Lifting eyebolts (4 off)

Note: *iXH 100, iXH 200H and iXH 610 variants have only two eyebolts provided for lifting.*

© Edwards Limited 2012. All rights reserved.
Edwards and the Edwards logo are trademarks of Edwards Limited.

Figure 4 - The controls/connectors on the rear of the pump

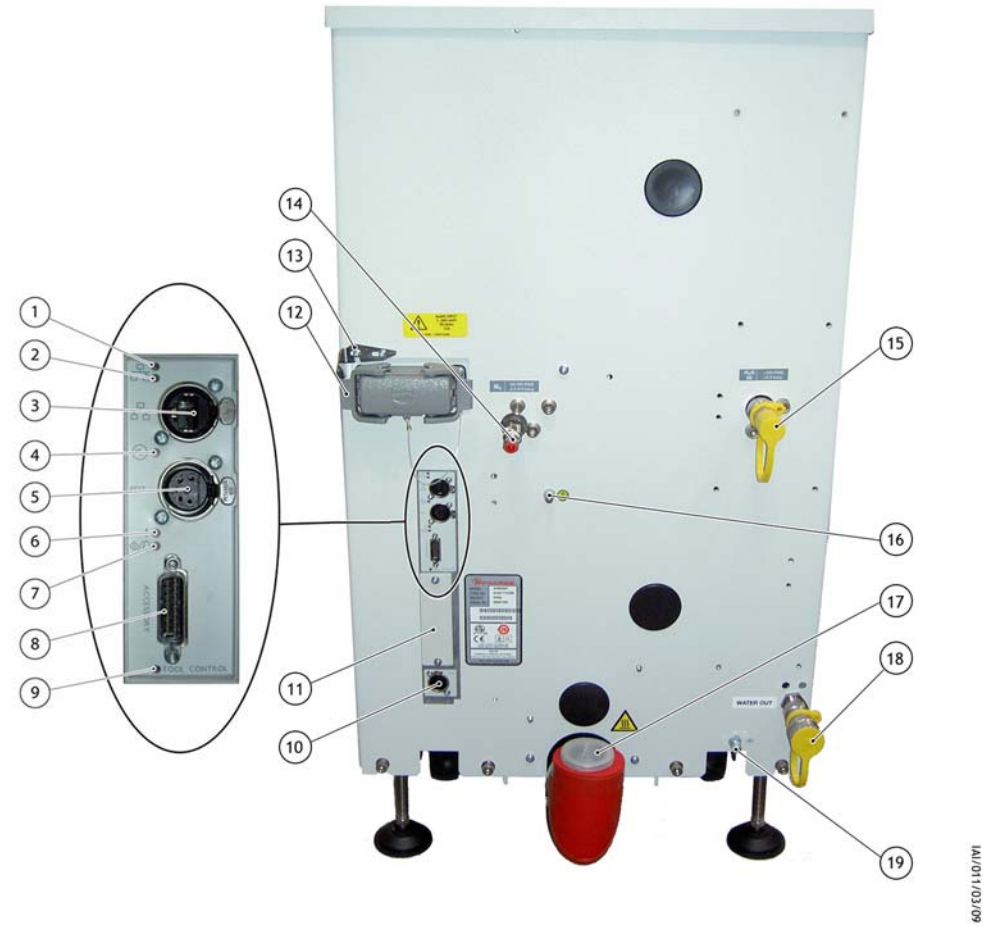

Item	Control/connector identification
1	Ethernet LAN LED (green)
2	Ethernet link LED (yellow)
3	Ethernet connection
4	Power LED (green)
5	System interface
6	Warning LED (yellow)
7	Running and Alarm LEDs (2 colours, either green or red)
8	Accessory interface
9	MicroTIM in control LED (green)
10	EMS interface

Item	Control/connector identification
11	Micro TIM connection (if fitted)
12	Electrical supply connection
13	Electrical connector locking mechanism
14	Nitrogen purge connection
15	Cooling water supply connection
16	Protective earth (ground) stud
17	Exhaust gas outlet connection
18	Cooling water return connection
19	RF earth (ground) stud

© Edwards Limited 2012. All rights reserved.
Edwards and the Edwards logo are trademarks of Edwards Limited.

2 Technical data

2.1 General technical data

Table 1 - General technical data

Pump	Characteristics								
	Body dimensions Length x Width x Height (excludes exhaust enclosure)*	Mass (excluding packaging)	Noise level (at ultimate)	Typical vibration level at inlet	Initial force to push the pump†	Sustained force to push the pump†	Pump inlet flange (bolted)	Exhaust gas outlet	Extraction port diameter
Units	mm	kg	dB(A)	mm/s	kg force	kg force			mm
iXH100	784 x 390 x 526	260	< 70	< 1.5	< 20	< 4	ISO63	NW40	105
iXH200H	901 x 390 x 526	287	< 70	< 1.5	< 20	< 4	ISO63	NW40	105
iXH450H	1000 x 517 x 650	455	< 70	< 1.5	< 20	< 10	ISO63	NW40	105
iXH500H	1000 x 517 x 650	490	< 70	< 1.5	< 20	< 10	ISO63	NW40	105
iXH610	784 x 390 x 780	355	< 70	< 1.5	< 20	< 4	ISO100	NW40	105
iXH1210/H	784 x 390 x 780	413 - 430	< 70	< 1.5	< 20	< 4	ISO100	NW40	105
iXH1220H/T	901 x 390 x 780	455 - 460	< 70	< 1.5	< 20	< 4	ISO100	NW40	105
iXH1820/H/T	901 x 390 x 780	471 - 487	< 70	< 1.5	< 20	< 4	ISO160	NW40	105
iXH3030/T	915 x 517 x 966	619 - 624	< 70	< 1.5	< 20	< 10	ISO160	NW40	105
iXH3045H	1000 x 517 x 966	776	70	< 1.5	< 20	< 10	ISO160	NW40	105
iXH3050H	1000 x 517 x 966	811	70	< 1.5	< 20	< 10	ISO160	NW40	105
iXH4545HT	1000 x 517 x 966	814	70	< 1.5	< 20	< 10	ISO200	NW40	105
iXH4550HT	1000 x 517 x 966	849	70	< 1.5	< 20	< 10	ISO200	NW40	105
iXH6045H/T	1080 x 517 x 966	860 - 865	74	< 1.5	< 20	< 10	ISO250	NW40	105
iXH6050H/T	1080 x 517 x 966	899	70	< 1.5	< 20	< 10	ISO250	NW40	105
pXH4500	1086 x 517 x 531	400	< 70	< 1.5	< 20	< 10	ISO200	ISO160	-
pXH6000	1086 x 517 x 531	435	< 70	< 1.5	< 20	< 10	ISO250	ISO160	-
iXL250Q	1092 x 390 x 830	515	<64	<1.5	<20	<10	ISO160	NW40	105
iXL500Q	1186 x 517 x 966	860	< 70	< 1.5	< 20	< 10	ISO160	NW50	105
iXL500R	1186 x 517 x 966	874	< 70	< 1.5	< 20	< 10	ISO160	NW50	105

© Edwards Limited 2012. All rights reserved.
Edwards and the Edwards logo are trademarks of Edwards Limited.

Table 1 - General technical data (continued)

Pump	Characteristics								
	Body dimensions Length x Width x Height (excludes exhaust enclosure)*	Mass (excluding packaging)	Noise level (at ultimate)	Typical vibration level at inlet	Initial force to push the pump†	Sustained force to push the pump†	Pump inlet flange (bolted)	Exhaust gas outlet	Extraction port diameter
Units	**mm**	**kg**	**dB(A)**	**mm/s**	**kg force**	**kg force**			**mm**
iXL750Q	1622 x 517 x 1031	918	<70	<1.5	22	<10	ISO160	NW50	105
iXL750R	1622 x 517 x 1031	976	<70	<1.5	22	<10	ISO160	NW50	105

* *Contact Edwards for installation drawings*
† *Measured in laboratory on level concrete surface*

Table 2 - General technical data

Item	Description	Rating	Units
Operating conditions	Intended use	Indoor	
	Ambient temperature range:		
	Operating	5 to 40	°C
	Storage	-45 to 55	°C
	Maximum relative humidity:	80% for temperatures up to 31 °C decreasing linearly to 50% relative humidity at 40 °C	
	Maximum operating altitude	2000	m
	Pollution degree	2 (IEC 61010)	
Materials in contact with process gas	Pump, shaft and rotors	Cast Iron, Steel	
	Seals	PTFE and fluoroelastomer	
	Gas system	Stainless steel, aluminium, brass, PTFE and fluoroelastomer	
Degree of protection provided by enclosure	Enclosure protection when installed	IP21D (IEC60529)	

© Edwards Limited 2012. All rights reserved.
Edwards and the Edwards logo are trademarks of Edwards Limited.

2.2 Performance data

Table 3 - Performance data

Pump	Characteristics		
	Typical peak pumping speed	Ultimate (shaft seal purge only)	Maximum continuous inlet pressure
Units	m^3/h	mbar	mbar
iXH100	100	$< 3 \times 10^{-2}$	1000
iXH200H	215	$< 3 \times 10^{-2}$	1000
iXH450H	500	$< 3 \times 10^{-2}$	1000*
iXH500H	500	$< 3 \times 10^{-2}$	1000*
iXH610	665	$< 5 \times 10^{-3}$	1000
iXH1210/H	1025 - 1065	$< 5 \times 10^{-3}$	1000
iXH1220H/T	1200 - 1250	$< 5 \times 10^{-3}$	1000
iXH1820/H/T	1700 - 1900	$< 5 \times 10^{-3}$	1000
iXH3030/T	2750 - 2900	$< 5 \times 10^{-3}$	1000*
iXH3045H	3225	$< 5 \times 10^{-3}$	1000*
iXH3050H	3200	$< 5 \times 10^{-3}$	1000*
iXH4545HT	4450	$< 5 \times 10^{-3}$	1000*
iXH4550HT	4220	$< 5 \times 10^{-3}$	1000*
iXH6045H/T	5000 - 5200	$< 5 \times 10^{-3}$	1000*
iXH6050H/T	5000 - 5200	$< 5 \times 10^{-3}$	1000*
pXH4500	N/A	$< 5 \times 10^{-3}$†	1000*
pXH6000	N/A	$< 5 \times 10^{-3}$†	1000*
iXL250Q	1900	$< 1 \times 10^{-3}$	1000*
iXL500Q	2150	$< 5 \times 10^{-3}$	1000*
iXL500R	3100	$< 5 \times 10^{-3}$	1000*
iXL750Q	2300	$< 1 \times 10^{-3}$	1000*
iXL750R	3450	$< 1 \times 10^{-3}$	1000*

* *Speed may be limited*

† *Ultimate achieved when pXH used in conjunction with an appropriate backing pump. Please contact Edwards to discuss your application. The pXH does not have a shaft seal purge.*

© Edwards Limited 2012. All rights reserved.
Edwards and the Edwards logo are trademarks of Edwards Limited.

2.3 Loading data

Table 4 - Loading data (refer to Figure 5)

Pump	Dimension to centre of gravity					Load at levelling foot position			
	A	B	C	D	E	1	2	3	4
Units	mm	mm	mm	mm	mm	kg	kg	kg	kg
iXH100	697	295	165.5	311	280	80	59	51	70
iXH200H	814	403	165.5	311	261	77	76	66	68
iXH450H	924	443	220	427	323	122	112	106	115
iXH500H	924	422	220	427	324	137	115	109	129
iXH610	697	329	165.5	311	374	100	89	78	88
iXH1210/H	697	330	165.5	311	430	122	106	94	108
iXH1220H/T	814	457	165.5	311	430	107	136	120	94
iXH1820/H/T	814	400	165.5	311	433	134	127	112	118
iXH3030/T	829	395	230	436	545	183	147	131	164
iXH3045H	924	422	220.5	427	534	218	183	171	203
iXH3050H	924	409	220	427	524	233	185	174	219
iXH4545HT	924	422	220.5	427	539	228	192	180	214
iXH4550HT	924	411	220.5	427	529	243	195	183	228
iXH6045H/T	1004	398	220.5	427	549	269	177	166	252
iXH6050H/T	1004	388	220.5	427	539	285	179	168	267
pXH4500	990	460.5	225	438	325	110	96	90	104
pXH6000	990	422	224.5	438	326	128	95	90	122
iXL250Q	1038	421	130.5	261	463	154	103	103	154
iXL500Q	1110	497	219	427	468	212	172	164	202
iXL500R	1110	497	219	427	468	241	195	185	229
iXL750Q	1547	730.9	169	338	512.2	215	244	244	215
iXL750R	1547	722.1	169	338	534.6	229	259	259	229

© Edwards Limited 2012. All rights reserved.
Edwards and the Edwards logo are trademarks of Edwards Limited.

Figure 5 - Centre of gravity and levelling foot loads

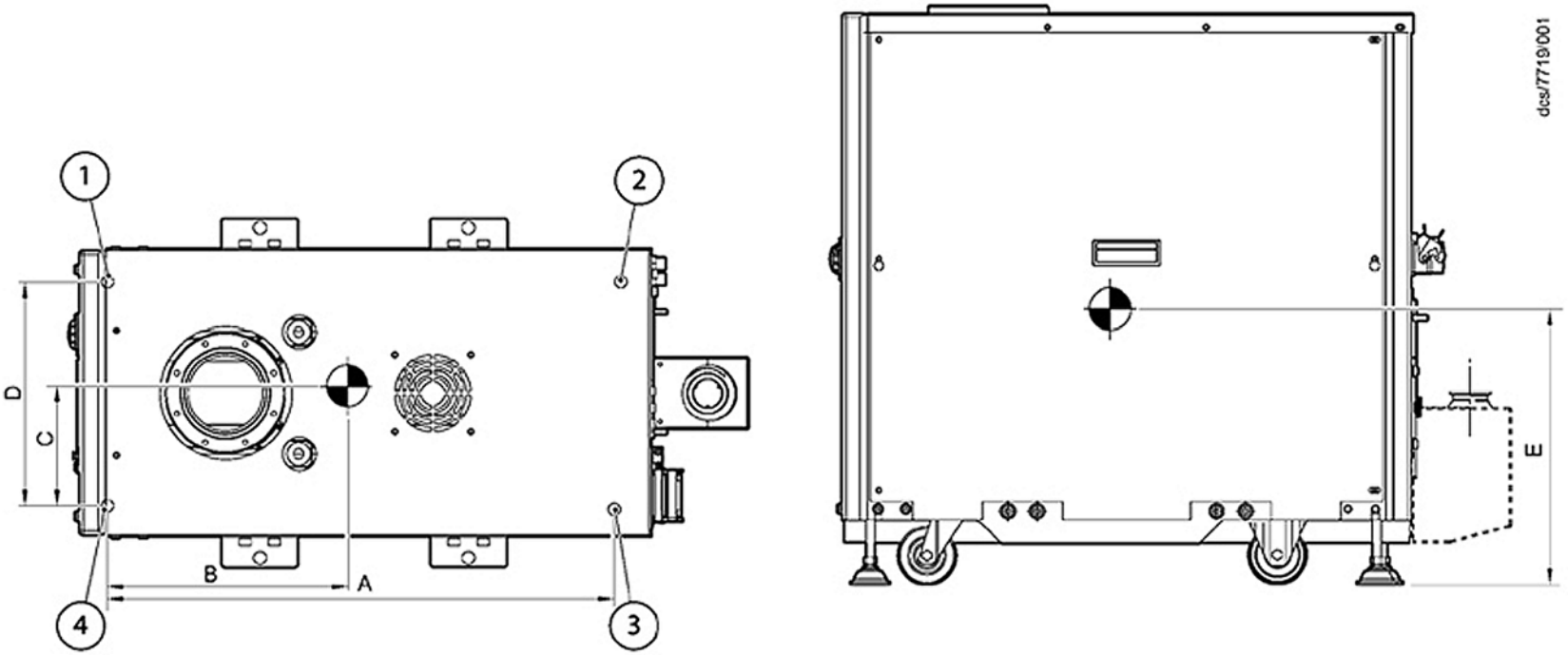

2.4 Nitrogen purge data

Table 5 - Nitrogen purge data for iXH and iXL systems

Characteristics	Rating	Units
Nitrogen supply pressure range	2.5-6.9 36 - 100	bar gauge psi gauge
Nitrogen supply quality	To ISO 8573	
Nitrogen inlet connection	1/4 inch tube fitting	

Note: *pXH systems do not have a nitrogen purge facility.*

© Edwards Limited 2012. All rights reserved.
Edwards and the Edwards logo are trademarks of Edwards Limited.

Note: *If you are not sure which gas module is fitted to your system, find the product code number on the label on the rear of the pump and then refer to the product configurators at the start of this manual.*

Table 6 - Gas module types and flows

For iXH systems:

Gas module type	Description	Module sizes available	Total flow, harsh setting	Total flow, medium setting	Total flow with inlet purge	Total flow with exhaust purge	Total flow with inlet and exhaust purge	Units
Loadlock	Shaft seal only	4	4	-	-	-	-	-
Single mode	Gas ballast purge with harsh/medium manually selected	44	44	28	-	-	-	slm
		96	96	56	-	-	-	slm
		133	133	88	-	-	-	slm
		204	204	133	-	-	-	slm
Single mode +	Gas ballast purge with harsh/medium manually selected + inlet purge	44	44	28	60	-	-	slm
		96	96	56	122	-	-	slm
		133	133	88	173	-	-	slm
		204	204	133	264	-	-	slm
Multi mode	Gas ballast purge with electronically selected harsh/medium + inlet purge + exhaust purge	44	44	22	60	94	110	slm
		96	96	34	122	146	172	slm
		133	133	65	173	183	223	slm
		204	204	*	264	254	314	slm

* *Contact Edwards*

Note: *H variant pumps fitted with Single Mode+ modules include the innovative Gas Buster™ inlet purge for improved powder handling.*

For iXL systems:

iXL systems are designed for use on clean applications only.

© Edwards Limited 2012. All rights reserved.
Edwards and the Edwards logo are trademarks of Edwards Limited.

2.5 Electrical data

Table 7 - Electrical data iXH100 to iXH1820/H/T

Characteristics	iXH100	iXH200H	iXH450H	iXH500H	iXH610	iXH1210	iXH1210H	iXH1220H/T	iXH1820/H/T	Units
Dry pump motor rating	4.5	7.5	11	11	4.5	4.5	7.5	7.5	7.5	kW
Mechanical booster motor rating	-	-	-	-	1.9	4.5	4.5	4.5	4.5	kW
Current rating (200 - 230 V systems)	21	38	44	44	28	28	38	38	38	A
Current rating (380 - 460 V systems)	11	20	23	23	14	14	20	20	20	A
Recommended branch circuit fuse UL (200 - 230 V systems)	25	45	55	55	35	35	45	45	45	A
Recommended branch circuit fuse IEC (200 - 230 V systems)	25	40	45	45	30	30	40	40	40	A
Recommended branch circuit fuse UL (380 - 460 V systems)	15	25	30	30	20	20	25	25	25	A
Recommended branch circuit fuse IEC (380 - 460 V systems)	15	20	25	25	15	15	20	20	20	A
Min cable size for 200 - 230 V systems (or corresponding AWG size)	6 (8)*	10 (6)	10 (6)	10 (6)	6 (8)*	6 (8)*	10 (6)	10 (6)	10 (6)	mm^2 (AWG)
Min cable size for 380 - 460 V systems (or corresponding AWG size)	6 (8)*	6 (8)*	6 (8)*	6 (8)*	6 (8)*	6 (8)*	6 (8)*	6 (8)*	6 (8)*	mm^2 (AWG)
Mains connector	Han® K 4/4	Han® K 4/4	Han® K 4/4	Han® K 4/4	Han® K 4/4	Han® K 4/4	Han® K 4/4	Han® K 4/4	Han® K 4/4	-

* *The minimum geometric wire gauge for Han® K 4/4 is 6mm² and minimum AWG size is 8 AWG*

© Edwards Limited 2012. All rights reserved.
Edwards and the Edwards logo are trademarks of Edwards Limited.

Table 7 - Electrical data iXH3030/T to pXH6000 (continued)

Characteristics	iXH3030/T	iXH3045H	iXH3050H	iXH4545HT	iXH4550HT	iXH6045H/T	iXH6050H/T	pXH4500	pXH6000	Units
Dry pump motor rating	7.5	11	11	11	11	11	11	-	-	kW
Mechanical booster motor rating	7.5	7.5	7.5	7.5	7.5	7.5	7.5	7.5	7.5	kW
Current rating (200 - 230 V systems)	44	63	63	63	63	63	63	28	28	A
Current rating (380 - 460 V systems)	23	32	32	32	32	32	32	14	14	A
Recommended branch circuit fuse UL (200 - 230 V systems)	55	80	80	80	80	80	80	35	35	A
Recommended branch circuit fuse IEC (200 - 230 V systems)	45	65	65	65	65	65	65	30	30	A
Recommended branch circuit fuse UL (380 - 460 V systems)	30	40	40	40	40	40	40	20	20	A
Recommended branch circuit fuse IEC (380 - 460 V systems)	25	35	35	35	35	35	35	15	15	A
Min cable size for 200 - 230 V systems (or corresponding AWG size)	10 (6)	25 (4)	25 (4)	25 (4)	25 (4)	25 (4)	25 (4)	6 (8)*	6 (8)*	mm^2 (AWG)
Min cable size for 380 - 460 V systems (or corresponding AWG size)	6 (8)*	10 (6)†	10 (6)†	10 (6)†	10 (6)†	10 (6)†	10 (6)†	6 (8)*	6 (8)*	mm^2 (AWG)
Mains connector	Han® K 4/4	Han® 100 A module	Han® 100 A module	Han® 100 A module	Han® 100 A module	Han® 100A module	Han® 100A module	Han® K 4/4	Han® K 4/4	-

* *The minimum geometric wire gauge for Han® K 4/4 is 6mm² and minimum AWG size is 8 AWG*

† *The minimum geometric wire gauge for Han® 100A module is 10mm² and minimum AWG size is 6 AWG*

© Edwards Limited 2012. All rights reserved.
Edwards and the Edwards logo are trademarks of Edwards Limited.

Table 7 - Electrical data iXL250Q, iXL500Q/R and iXL750Q/R (continued)

Characteristics	iXL250Q	iXL500Q	iXL500R	iXL750Q	iXL750R	Units
Dry pump motor rating	7.5	11	11	22	22	kW
Mechanical booster motor rating	4.5	7.5	7.5	7.5	705	kW
Current rating (200 - 230 V systems)	38	75	63	140	135	A
Current rating (380 - 460 V systems)	20	40	32	78	74	A
Recommended branch circuit fuse UL (200 - 230 V systems)	50	100	80	170	160	A
Recommended branch circuit fuse IEC (200 - 230 V systems)	35	80	65	140	135	A
Recommended branch circuit fuse UL (380 - 460 V systems)	25	50	40	95	90	A
Recommended branch circuit fuse IEC (380 - 460 V systems)	20	50	35	80	75	A
Min cable size for 200 - 230 V systems (or corresponding AWG size)	10 (8)	25 (4)	25 (4)	50 (1/0)	50 (1/0)	mm^2 (AWG)
Min cable size for 380 - 460 V systems (or corresponding AWG size)	6 (8)*	10 (6)†	10 (6)†	25 (4)	25 (4)	mm^2 (AWG)
Mains connector for 200 - 230 V systems	Han® K 4/4	Han® 100 A module	Han® 100 A module	Han® 200 A module	Han® 200 A module	-
Mains connector for 380 - 460 V systems	Han® K 4/4	Han® 100 A module	Han® 100 A module	Han® 100 A module	Han® 100 A module	-

† *The minimum geometric wire gauge for Han® 100A module is 10mm² and minimum AWG size is 6 AWG*

© Edwards Limited 2012. All rights reserved.
Edwards and the Edwards logo are trademarks of Edwards Limited.

Table 8 - General electrical data

Description	Rating	Units
Supply voltage 3-phase	either 200 - 230 or 380 - 460 (see rating plate)	V a.c.
Frequency	50/60	Hz
Wiring configuration	3 wire plus earth (ground)	
Branch circuit protection requirement	Current rating, refer to Table 7	
	Fuse Class gG (IEC 60269), UL class T, class J or class RK5, Bussmann type JJS or equivalent I^2t characteristic rated to 600 V	
Voltage tolerance range	+/- 10%	
Installation category	II (IEC 60664)	
Input supply voltage unbalance	Should not exceed 2% when assessed over any one minute period	
Short circuit current rating (when installed with class T or class J fuses)	200	kA
Second protective earth (ground) conductor	Must be fitted with cross-sectional area at least equal to phase conductor size up to 16 mm^2	
Maximum permitted overcurrent protection for systems with the Han® K 4/4 mains connector*		
for 200 - 230 V systems	60	A
for 380 - 460 V systems	35	A
Typical earth leakage†		
For 200 - 230 V systems		
- for iXL750Q and iXL750R	9	mA
- for all other systems	<5	mA
For 380 - 460 V systems		
- for iXL750Q and iXL750R	18	mA
- for all other systems	<10	mA

* *If you use overcurrent protection above the ratings in Table 7 for systems with the Han® K 4/4, the minimum cable sizes no longer apply and you must ensure that the pump cable size is appropriately rated and in accordance with local legislation and electrical regulations. Ensure that cable size is compatible with the mains connector, refer to Table 9.*

† *Typical earth leakage values were measured at steady-state conditions.*
Note that higher leakage currents may occur:
i) under transient conditions such as power on or pump acceleration or
ii) with abnormal supply configurations such as a missing or earthed phase or unbalanced supply voltages.

Contact Edwards for more information about configuration requirements for earth leakage reduction.

© Edwards Limited 2012. All rights reserved.
Edwards and the Edwards logo are trademarks of Edwards Limited.

Table 9 - Electrical connections

Description	Mating Connector description / external supply rating	Internal supply rating
Mains connection Refer to installation section for wiring diagram	Refer to Table 7 for the mains connector fitted to each variant. Connector is either: Harting Han® K 4/4-F finger safe 09 38 008 2703, 6-16 mm^2 fine stranded wire (VDE 0295 class 5, refer to Table 10), 8.9mm max insulation diameter Or Harting Han® Axial Screw module 100A (2 off required), 09 14 002 2753 10-25 mm^2 or 09 14 002 2751, 16-35 mm^2 fine stranded wire (VDE 0295 class 5, refer to Table 10) Or Harting Han® Axial Screw module 200A (3 off required), part number of mating half suitable for 25 - 40 mm^2 wire is 09 14 001 2763 or 09 14 001 2762 for 40 - 70 mm^2 wire. Use fine stranded wire (VDE 0295 class 5, refer to Table 10)	
PDT Interface (front)	XLR type 5-way plug	24 V d.c. 0.2 A
System Interface (rear)	XLR type 5-way plug	24 V d.c. 0.75 A*
Ethernet interface	Standard RJ45 type or Neutrik® EtherCon® RJ45	(IEEE802.3i 10 Base T Ethernet)
EMS interface External emergency stop switch Pin 1 - supply, Pin 2 - return ***Note:*** *If there is no external connection a link plug must be fitted to operate the pump.* Internal emergency stop switch Pin 3 - common, Pin 4 - normally open Comms 24 V supply Pin 5 - supply, Pin 6 - 0 V supply common Chassis	XLR type 6-way plug 30 V a.c. 1 A, 60 V d.c. 0.55 A	 24 V d.c. 100 mA 24 V d.c. 0.75 A*

© Edwards Limited 2012. All rights reserved.
Edwards and the Edwards logo are trademarks of Edwards Limited.

Table 9 - Electrical connections (continued)

Description	Mating Connector description / external supply rating	Internal supply rating
Accessory interface Analogue measurement for water flow meter Pin 1 - input, Pin 5 common Active accessory module Pin 3 - RS485 +, Pin 10 - RS485 – Pump running status contacts Pin 6 - Dry pump (normally open) Pin 14 - Mechanical booster (normally open) Pin 15 – common	15-way D socket 30 V a.c. 1 A, 60 V d.c. 0.5 A	
Gate valve Pin 4 - Gate valve drive transistor (open collector) Gate valve position sense Pin 7 - 'Closed', Pin 8 - 'Open' Power Supplies Pin 12 - Accessory 24 V supply Pin 13 - Accessory 24 V supply† Pin 5 - 0 V supply common		24 V d.c. 0.75 A* 24 V d.c. 0.2 A

* *The System interface, the EMS interface and the Accessory interface have a combined current rating of 0.75 A.*

† *This supply will be disconnected in the event of an emergency stop.*

Table 10 - Wire assembly according to VDE 0295

Wire Size (mm²)	Fine stranded wires VDE 0295 class 5
6	84 x 0.30
10	80 x 0.40
16	128 x 0.40
25	200 x 0.40
35	280 x 0.40
50	400 x 0.40

© Edwards Limited 2012. All rights reserved.
Edwards and the Edwards logo are trademarks of Edwards Limited.

2.6 Cooling-water data

Table 11 - Water cooling system data

Description	Rating	Units
Maximum supply pressure	6.9	barg
	100	psig
Maximum allowable system differential pressure	5.5	bar
Minimum required pressure differential across supply and return	Refer to Table 13	
Supply temperature range	Refer to Table 12	
Water type	Treated or non-corrosive industrial	
Maximum particle size	0.03	mm^2
Acidity	6.5 to 8.0	pH
Hardness	<100	ppm of $CaCO_3$ (<100 mg of $CaCO_3$ per litre)
Resistivity	$1k \leq \rho \leq 1000k$	ohm-cm
Materials in contact with cooling water	Stainless steel, Nitrile, PTFE, brass and fluoroelastomer	
Water inlet connection	3/8 inch BSP male quick connector	
Water outlet connection	3/8 inch BSP female quick connector	

© Edwards Limited 2012. All rights reserved.
Edwards and the Edwards logo are trademarks of Edwards Limited.

Technical data

Table 12 - Cooling water supply temperature

Cooling water supply temperature	Units	Applies to pump models
10 - 30	°C	iXH100 iXH200H iXH610 iXH1210/H iXH1220H/T iXH1820/H/T iXH3030/T iXL250Q
10 - 25	°C	iXH450H iXH500H iXH3045H iXH3050H iXH4545HT iXH4550HT iXH6045H/T iXH6050H/T pXH4500 pXH6000 iXL500Q iXL500R iXL750Q iXL750R

© Edwards Limited 2012. All rights reserved.
Edwards and the Edwards logo are trademarks of Edwards Limited.

Table 13 - Water consumption data

Pump	Characteristics		
	Min flow rate required (for low temp operation)	Typical water flow rate*	Rated Min Pressure Differential†
Units	l/min	l/min	bar
iXH100	2	2	1
iXH200H	4	2.7	1
iXH450H	6	6	1.25
iXH500H	6	6	1.25
iXH610	4	3	1
iXH1210	5	4	1
iXH1210H	6	4.2	1
iXH1220H/T	7	4.7	1
iXH1820	6	4.2	1
iXH1820H	7	4.7	1
iXH1820T	6	3.5	1
iXH3030	8	7	1.5
iXH3030T	8	8	1.5
iXH3045H	12	11	2
iXH3050H	12	11	2
iXH4545HT	12	11	2
iXH4550HT	12	11	2
iXH6045H/T	12	11	2
iXH6050H/T	12	11	2
pXH4500	6	6	1.25
pXH6000	6	6	1.25
iXL250Q	*7*	6	1
iXL500Q	*12*	11	2
iXL500R	*12*	11	2
iXL750Q	*10*	9	2.5
iXL750R	*10*	9	2.5

* *Water consumption varies with pump operating temperature and water temperature; these figures measured at factory default internal pump temperature, 15°C water inlet temperature and ultimate inlet pressure.*

† *The TMS is a valved system and the 'Rated Min Pressure Differential' may not correlate with water flow rates stated in the table under all operating conditions. The 'Rated Min Pressure Differential' is required to maintain adequate cooling water flow under adverse operating conditions.*

© Edwards Limited 2012. All rights reserved.
Edwards and the Edwards logo are trademarks of Edwards Limited.

2.7 T variants

Table 14 - Heater data

Description	Rating	Units
Exhaust heater control temperature	160	°C
Exhaust heater power consumption	0.2	kW
Typical booster heater control temperature	106	°C
Typical booster heater power consumption	1	kW

2.8 Tracer gas analysis

Tracer gas fugitive emission testing was carried out in accordance with the method given in Appendix A2 of SEMI S6 on three different systems, iXH100, iXH1820 and iXH6045H.

Table 15 - Tracer gas test parameters

Test Parameters	
Tracer gas	SF_6 (Sulphur Hexafluoride)
Tracer gas concentration	100%
Tracer gas release rate	2 slpm
Tracer gas release points	Tracer gas flow evenly split between 2 release points 1) exhaust flange on pump 2) exhaust elbow joint within exhaust extraction cover
Process gas	Nitrogen

Table 16 - Tracer gas test system parameters

System Parameters	iXH100	iXH1820	iXH6045H	Units
Extraction flow rate: From port on top of enclosure From port on exhaust extraction kit	 180 0	 180 0	 310 60	m^3/h
Volume of enclosure	0.13	0.24	0.46	m^3
Free volume of enclosure	0.074	0.118	0.229	m^3
Air changes per minute	40.54	25.4	11.2	
Hardware configuration: - 150mm duct connected to port on top of enclosure - Exhaust extraction cover kit fitted - 50mm duct connected to exhaust extraction kit	 ✓ ✓ x	 ✓ ✓ x	 ✓ ✓ ✓	

© Edwards Limited 2012. All rights reserved.
Edwards and the Edwards logo are trademarks of Edwards Limited.

Table 17 - Worst case test results

Process Gas		Maximum Gas Flow (slm)	TLV/LEL (ppm)	25% TLV/ LEL (ppm)	SF_6 Release rate (slm)	Max SF_6 Detected outside enclosure	ERC (ppm)	Pass/ Fail *
Chlorine	Cl_2	1	0.5	0.125	2	0.079	0.04	Pass
Ammonia	NH_3	10	25	6.25	2	0.079	0.40	Pass
Arsine	AsH_3	0.1	0.05	0.0125	2	0.079	0.00	Pass
Boron Trichloride	BCl_3	1	5	1.25	2	0.079	0.04	Pass
Carbon Monoxide	CO	1	25	6.25	2	0.079	0.04	Pass
Chlorine Trifluoride	ClF_3	0.5	0.1	0.025	2	0.079	0.02	Pass
DCS	$SiCl_2H_2$	2	5	1.25	2	0.079	0.08	Pass
Diborane	B_2H_6	0.05	0.1	0.025	2	0.079	0.00	Pass
Fluorine	F_2	4.5	1	0.25	2	0.079	0.18	Pass
Hydrogen	H_2	150	4000	1000	2	0.079	5.93	Pass
Hydrogen Chloride	HCl	20	5	1.25	2	0.079	0.79	Pass
Hydrogen Fluoride	HF	2	3	0.75	2	0.079	0.08	Pass
Nitrogen Trifluoride	NF_3	10	10	2.5	2	0.079	0.4	Pass
Phosphine	PH_3	0.2	0.3	0.075	2	0.079	0.01	Pass
Silane	SiH_4	6	5	1.25	2	0.079	0.24	Pass
Sulphur Hexafluoride	SF_6	2	1000	250	2	0.079	0.08	Pass
TEOS	$SiC_8H_{20}O_4$	2	10	2.5	2	0.079	0.08	Pass
Tungsten Hexafluoride	WF_6	1	3	0.75	2	0.079	0.04	Pass

* where Pass indicates acceptable enclosure (satisfies SEMI S2 criteria of less than 25.0% of the TLV)

The pumps tested represent the extremes of the full range of systems. The results in Table 17 are therefore considered representative across the full range of iXH and iXL systems. Extraction flow rates required for each system are detailed in Table 18.

© Edwards Limited 2012. All rights reserved.
Edwards and the Edwards logo are trademarks of Edwards Limited.

Table 18 - Extraction rates required by system variant

System	Extraction rate required at top of enclosure (m^3/h)	Extraction rate required at exhaust cover (m^3/h)
iXH100	180	0
iXH200H	180	0
iXH450H	310	60
iXH500H	310	60
iXH610	180	0
iXH1210/H	180	0
iXH1220H/T	180	0
iXH1820/H/T	180	0
iXH3030/T	310	60
iXH3045H	310	60
iXH3050H	310	60
iXH4545HT	310	60
iXH4550HT	310	60
iXH6045H/T	310	60
iXH6050H/T	310	60
iXL250Q	180	60
iXL500Q	310	60
iXL500R	310	60
iXL750Q	310	60
iXL750R	310	310

© Edwards Limited 2012. All rights reserved.
Edwards and the Edwards logo are trademarks of Edwards Limited.

3 Installation

WARNING

Obey the safety instructions given below and take the appropriate precautions. If you do not, you can cause injury to people and damage to equipment.

WARNING

The system should not be operated with the enclosure panels removed.

WARNING

The system contains electrolytic capacitors which may emit dangerous fumes under certain fault conditions. Ensure the system is installed in a well-ventilated area.

Potential hazards on the dry pumping system include electricity, hot surfaces, process chemicals, Fomblin® oil, nitrogen and water under pressure.

Detailed safety information is given in Section 4 and Edwards Safety Manual Publication Number P400-40-100 Vacuum Pump and Vacuum Systems.

- Only Edwards trained engineers may install the dry pumping system. Users can be trained by Edwards to conduct the tasks described in this manual, contact your local service centre or Edwards for more information.
- Do not remove the temporary cover or blanking plate from the dry pumping system inlet and exhaust until you are ready to connect the dry pumping system to your vacuum or exhaust-extraction system. Do not operate the dry pumping system unless the inlet and exhaust are connected to your vacuum and exhaust-extraction system.
- Vent and purge the process system (if the dry pumping system is to replace an existing pumping system) with nitrogen for 15 minutes before you start installation work. Refer to Section 5.
- Systems containing the Loadlock gas module must not be used with hazardous process gases. If you are not sure which gas module is fitted to your system, find the product code number on the label on the rear of the pump and then refer to the product configurators at the start of this manual. If in doubt, consult Edwards.
- Disconnect the other components in the process system from the electrical supply so that they cannot be operated accidentally.
- Electrical, nitrogen and water supplies are all potentially hazardous energy sources. Before carrying out any maintenance the supply of these sources should be locked and tagged out.
- The pump system includes provision for ventilation extraction and secondary containment of oil and water leaks. Any unintended overflows or spills must be removed immediately to avoid risk of slips.
- Obey all national and local rules and safety regulations when you install the dry pumping system. Consult Edwards Safety Manual Publication Number P400-40-100 before you pump hazardous materials. This publication is available on request: contact your supplier or Edwards.
- Route and secure cables, hoses and pipework during installation to avoid possible risk of trips.
- Before you locate the pump, ensure that the installation area is clean and free from debris and contamination (such as oil).

In order for the pumping system to perform to specification, you must provide appropriate facilities as detailed in this manual.

© Edwards Limited 2012. All rights reserved.
Edwards and the Edwards logo are trademarks of Edwards Limited.

3.1 Locate the dry pumping system

WARNING

You must use suitable lifting equipment to move the system. It is too heavy to lift by hand.

WARNING

Do not exceed the topple angle of 10 ° when moving the pump. Wheel the system on its castors to move it into its operating position. The system should only be wheeled short distances over flat surfaces. If the floor surface is uneven or has obstacles the system should be lifted with suitable lifting equipment. If lifting the system is impractical, or there are other site difficulties, please consult Edwards for further advice.

WARNING

Ensure that the maximum angle between paired slings used to lift the system is 45°.

Use the following procedure to locate the system in its operating position. The system must be located on a firm, level surface, to ensure that it works correctly and the system is not damaged. The pump must be level to a maximum of 3 degrees in any direction, measured at the pump inlet.

It is important to note that the castors are intended only to aid manoeuvre of the system into its final operating position. The force required to push a pump on its castors varies greatly depending on the surface finish and cleanliness of the floor and any slopes or inclines. It is the user's responsibility to carry out a risk assessment of their own location and take appropriate measures to ensure that the system is manoeuvred safely and in accordance with local and national manual handling guidelines.

1. Use suitable lifting equipment attached to all four lifting eyebolts to move the system close to its final operating position.

Note: *The iXH100, iXH200H and iXH 610 variants have only two eyebolts provided for lifting. Figure 3, item 8.*

2. Adjust the levelling feet (Figure 3, item 2) to make sure that the system is level and is not supported by the castors, suggested jacking height is 5 mm.
3. Remove the lifting eyebolts and replace with the lifting eyebolt hole plugs supplied with the systems.
4. Ensure that access is possible to the emergency stop button (refer to Figure 2, item 1), if not use an iXH Disconnect Box (refer to Section 7.3).

If you want to secure the system in place to prevent inadvertent movement (for example, during an earthquake), take note of the following:

- The seismic brackets (Figure 3, item 4) are designed to withstand a level 4 earthquake in a ground floor installation (available as an accessory, refer to Section 7.3).
- The system can be secured to the floor by fitting suitable bolts or studs (not supplied) through the 17.5 mm diameter hole in the seismic brackets.
- If vibration transmission to the floor is a concern, suitable vibration isolators (not supplied) should be fitted between the seismic brackets and the bolt or stud.
- Ensure that the bolt spacing is adequate for the floor strength and loads anticipated.

© Edwards Limited 2012. All rights reserved.
Edwards and the Edwards logo are trademarks of Edwards Limited.

Figure 6 - Reduce the effective system footprint

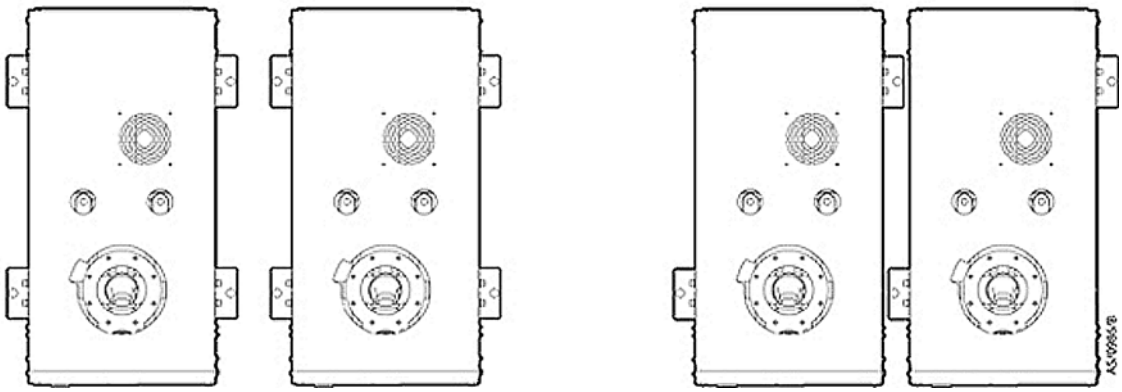

- The pumping system has provision to attach four seismic brackets however on the smaller systems, two brackets are capable of restraining the system during an earthquake. The smaller systems can therefore be secured as shown in Figure 6 for example, to reduce the effective system footprint if required. Refer to Section 7.3 to determine the correct seismic bracket kit for your system and for information about the systems which may be restrained with only two brackets.

3.2 Lubrication

The pumping systems are given a charge of oil before leaving the factory. There is no requirement to check and adjust the oil level.

3.3 Connect the dry pumping system to your vacuum/exhaust system

WARNING

Pipe the exhaust to a suitable treatment plant to prevent the discharge of dangerous gases or vapours to the surrounding atmosphere.

WARNING

Do not touch the pump exhaust and check-valve (if fitted) whilst the pump is running since the temperatures of these parts can cause burns. These parts will remain hot after the pump has stopped.

WARNING

Do not operate the system with the exhaust pipeline blocked. If the exhaust pipeline is blocked, the system can generate exhaust pipeline pressures of up to 10 bar (10 x 10^5 Pa). Note that a pressure spike up to a maximum 15 bar (15 x 10^5 Pa) can be generated for less than 1 second in the exhaust pipeline on large pumps (iXH450H, iXH500H and iXL500*) if the inlet is instantaneously exposed to atmospheric pressure when the pump is running and the exhaust is blocked.

* *If you are not sure which dry pump you have, find the product code number on the label on the rear of the pump and then refer to the product configurator at the front of this manual.*

© Edwards Limited 2012. All rights reserved.
Edwards and the Edwards logo are trademarks of Edwards Limited.

CAUTION

Use a catchpot to prevent the drainage of condensate back into the system. Condensate that drains back into the system could damage the pump.

Do not reuse any O-ring or O-ring assembly and do not allow debris to get into the system during installation.

When you connect your pumping system to your vacuum system, take note of the following:

- To get the best pumping speed, ensure that the pipeline which connects the vacuum system to the pumping system is the minimum length possible and has an internal diameter not less than the system inlet-port.
- Ensure that all components in the vacuum pipeline have a maximum pressure rating which is greater than the highest pressure that can be generated in your system.
- Incorporate flexible pipelines in the vacuum pipeline to reduce the transmission of vibration and to prevent loading of coupling-joints. We recommend that you use Edwards braided flexible pipelines.
- For T variants and systems containing the iXH450H and iXH500H dry pumps, ensure that exhaust pipelines are rated for 160 °C at the point of connection to the pump. For all other pump variants, ensure that pipelines are rated for 110 °C. Edwards recommends the use of metal seals at any joint where the continuous operating temperature of the exhaust is greater than 160 °C.
- Adequately support vacuum/exhaust pipelines to prevent the transmission of stress to pipeline coupling-joints.
- Incorporate a pressure gauge in the inlet pipeline, so that you can determine that the dry pumping system operates correctly.
- You must be able to isolate the dry pumping system inlet from the atmosphere and from your vacuum system if you have pumped or produced corrosive chemicals.
- The outlet of the iXH and iXL exhaust pipe can have a check-valve fitted which prevents the suck-back of exhaust vapours after the pumping system is shutdown. The check-valve also provides additional attenuation of the pulses in exhaust pressure.
- On very dusty applications, use a low-impedance inlet-filter to minimise damage to the pump.

1. Referring to Figure 7, remove the temporary cover or blanking plate from the inlet of the pumping system. Take care not to drop screws, tools etc into the pump inlet. Retain the nuts, bolts, washers and blanking plate for future use. Retain the temporary cover for future use on non-contaminated pumps only. The inlet O-ring is supplied with the pump, it is fitted underneath the inlet flange cover.
2. Use the O-ring supplied and suitable nuts, bolts and washers (not supplied) to connect the inlet-flange (Figure 3, item 5) to your vacuum system. The inlet flange is not designed for use with a trapped O-ring or centering ring. Use Edwards half claw clamps when connecting an ISO style foreline flange to the pumping system inlet. Refer to Figure 7.
3. For iXH and iXL use the trapped O-ring seal and clamp supplied to connect the exhaust outlet (Figure 4, item 17) on the exhaust pipe, to your exhaust extraction system. For pXH systems, the exhaust connection is situated underneath the product.

Note: *The system is supplied with either a trapped O-ring or a metal seal depending on pump type and anticipated exhaust temperatures. Ensure that you always replace seals with the same type.*

© Edwards Limited 2012. All rights reserved.
Edwards and the Edwards logo are trademarks of Edwards Limited.

Figure 7 - Connecting the pump inlet

Undo screws Remove cover

Do not use trapped O-ring or centering ring

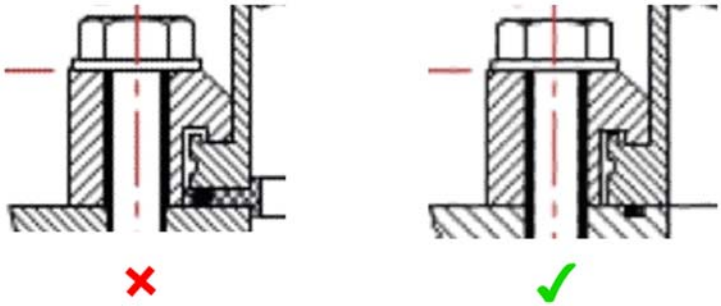

Use Edwards half claw clamps:

Flange diameter	Half Claw Clamp Part No.	Qty Required	Tightening Torque (Nm)
ISO63	C10007093	4	5
ISO100	C10007093	8	5
ISO160	C10011093	8	5
ISO200	C10011093	12	5
ISO250	C10011093	12	5

3.4 Connect to your factory extraction system (optional)

An extraction port is provided on iXH and iXL systems to allow secondary exhaust ventilation. When connected, the airflow operates continuously and will extract substances of concern that may be released during a failure.

Refer to Section 2.8 for extraction rates required for each pump model and to Section 7.3 for the required exhaust extraction cover kit.

Refer to Figure 3, item 7 for location of the extraction port. The pXH does not have facility for extraction.

© Edwards Limited 2012. All rights reserved.
Edwards and the Edwards logo are trademarks of Edwards Limited.

3.5 Connect the nitrogen supply

CAUTION

Ensure that your nitrogen supply conforms to the requirements given in the Technical Data Section. If it doesn't, the gas pipelines may become blocked or the system may be damaged.

Refer to Figure 4, item 14 for location of the nitrogen purge port. The gas module inside the system may be adjusted to suit process demands. Refer to Section 5.6 for instructions on gas module configuration. The pXH does not have the facility for a nitrogen purge.

Note: *Refer to Section 2.4 for nitrogen supply requirements.*

3.5.1 Flammable/pyrophoric materials

WARNING

You must obey the instructions and take note of any precautions given below to ensure that pumped gases do not enter their flammable ranges.

When flammable or pyrophoric materials are present within the pump there may be additional risks that the user is responsible for assessing and managing as part of the entire Process Tool installation. The severity of the risks and the necessary control measures will depend largely on whether the tool exhaust is in the flammable region, if this is part of normal Process Tool operation, or if it might only occur under rare conditions. The additional risks arise because all dry pumps must be considered a potential source of ignition owing to the heat of compression, or possibly friction. If ignition occurs then the following may happen:

- High pressures could occur within the pump and may not be contained
- A flame front could travel back up the foreline
- A flame front could travel downstream from the exhaust of the pump.

Industry best practice suggests that the following measures will reduce the risks of pumping flammable mixtures and pyrophoric materials, but it is the user's responsibility to carry out a risk assessment and take appropriate measures:

- Do not allow air to enter the equipment
- Ensure that the system is leak tight
- Ensure that gases in the pump do not enter the flammable range. This may be achieved by diluting gases in the pump by supplying sufficient inert gas purge. For example, dilution with nitrogen to below one quarter LEL (lower explosive limit) or, if that is not practical, to below 60% LOC (limiting oxidant concentration).
- The gas module supplied with the pump is not intended to perform a safety function. Users may need to consider adding appropriate measures to monitor the flow of purge gas, for example external sensors. Systems that are fitted with the loadlock gas module must not be used on applications pumping flammable or pyrophoric materials.

For further information please refer to Semiconductor Pumping Application Guide (Publication no. P411-00-090) or contact Edwards.

© Edwards Limited 2012. All rights reserved.
Edwards and the Edwards logo are trademarks of Edwards Limited.

3.5.2 Gas purges

WARNING

If you use inert gas purges to dilute dangerous gases to a safe level, ensure that the pump is shut down if an inert gas supply fails.

Switch on the inert gas purge to remove air from the pump and the exhaust pipeline before the process starts. Switch off the purge flow at the end of the process only after the remaining flammable gases or vapours have been purged from the exhaust pipeline.

If liquids that produce flammable vapours could be present in the pump foreline, then the inert gas purge to the dry pumping system should be left on all the time this liquid is present. Flammable liquids could be present in the foreline as a result of condensation or may be carried over from the process.

When calculating the flow rate of inert gas required for dilution, consider the maximum flow rate for the flammable gases/vapours that could occur. For example, if a mass flow controller is being used to supply flammable gases to the process, you should assume a flow rate for flammable gases that could arise if the mass flow controller is fully open.

Continually measure the inert gas flow rate: if the flow rate falls below that required, then the flow of flammable gases or vapours to the pump must be stopped.

3.6 Leak-test the system

WARNING

Leak test the system after installation and seal any leaks found to prevent leakage of dangerous substances out of the system and leakage of air into the system.

Note: *If you need further information on leak-testing, contact your supplier or Edwards for advice.*

3.7 Electrical supply

WARNING

Ensure that the electrical installation of the pumping system conforms with your local and national safety requirements. It must be connected to a suitably fused and protected electrical supply and a suitable earth (ground) point.

WARNING

This equipment is suitable for Installation Category II as defined in IEC 60664-1. The dry pumping system must be connected to an isolator that disconnects all current carrying conductors and can be locked out in the off position (LOTO). The isolator must be in close proximity to the equipment, within easy reach of the operator and identified as the disconnect device for the equipment.

WARNING

Isolate the electrical supply before you disconnect the electrical supply cable from the dry pumping system.

© Edwards Limited 2012. All rights reserved.
Edwards and the Edwards logo are trademarks of Edwards Limited.

WARNING

Ensure that the system and your electrical supply cable are suitably protected against earth (ground) faults and that the earth (ground) conductor of the electrical supply cable is longer than the phase conductors in the connector. You must fit a second protective earth (ground) conductor (with a cross-sectional area at least equal to phase conductor size up to 16 mm^2) to the protective earth (ground) stud, Figure 4, item 16.

WARNING

All connections to the interface control must be double insulated or have equivalent protection. Do not connect voltages greater than 30 V a.c. or 60 V d.c. to the control/interface connections. If you do, the interface control will not provide protection against electric shock.

WARNING

The power wiring to the system must be properly protected.

CAUTION

All systems are supplied already configured for your electrical supply. You cannot reconfigure the system between the low voltage (200 V to 230 V) and high voltage (380 V to 460 V) ranges.

CAUTION

This is an industrial (Class A) product as defined by EN61326. To ensure compliance with European Electromagnetic Compatibility (EMC) requirements for EMC emissions, please note that it is not intended for use in domestic buildings, or in properties directly connected to an electrical supply network which also supplies domestic buildings.

CAUTION

Do not connect voltages greater than specified in Table 9 to the control/interface connections. If you do, the interface control may be damaged.

Contact Edwards if you wish to use the system with a power supply in a different voltage range to that specified on the rating plate.

The system is protected from motor overloads and short circuits by solid state electronics. The power wiring between the system and your electrical installation must be protected. When selecting overload protection, refer to Section 2.5. Pump rating information can be found on the label on the rear of the pump.

If you connect the electrical supply to your system through an ELCB (or RCD depending on territory) it must be suitable for protection of equipment with a d.c. component in the fault current, and suitable for short duration switch-on surges, and for high leakage current (for example, type B, according to EN50178).

The secondary protective earth (ground) is required in case of failure of the primary earth and because pump filters can cause high earth leakage currents, refer to Table 8.

© Edwards Limited 2012. All rights reserved.
Edwards and the Edwards logo are trademarks of Edwards Limited.

3.7.1 Mains supply cable connection

WARNING

The Harting connector is not approved for connection and disconnection under load.

If you need further information on connecting the electrical supply, contact Edwards for advice.

Three different types of electrical supply connector are used on these pumping systems. Refer to Section 2.5 for details of the connector types and the systems to which they are fitted. Some pump variants are supplied with the appropriate parts needed to make up the mating half of the electrical connector, otherwise the connectors are available as an accessory, refer to Section 7.3. Refer to either Figure 8,9 or 10 for the appropriate electrical connector for your system and follow these instructions to make your electrical supply cable:

1. Screw the strain relief bush onto the connector outer cover.
2. Pass a suitable cable through the strain relief bush and cover. Refer to Section 2.5 for suitable cable sizes and type. Cables must be bare-ended without ferrules to ensure correct clamping in the connector block.
3. Before starting the assembly, use the hex (Allen) key specified in the appropriate figure to ensure that the axial cone is screwed fully downward to completely open the contact chamber.
4. Carefully remove the cable insulation to the exact dimension specified in the appropriate figure. Do not twist the cable strands.
5. Referring to the appropriate figure to identify the connections, insert each wire completely into the contact chamber until the copper strands reach the bottom. Keep the cable in position while applying the recommended tightening torque.
6. Fit the earth (ground) wire to the Protective Earth connection as shown in the appropriate figure.

Note: *The Protective Earth connection on the Han® 100A connector is on the hinged frame. It may be necessary to use one of the cable shoes (provided in the connector kit) to fit the protective earth (ground) wire. The cable shoe provided for the 380 - 460V systems is intended for 16 mm^2 wire. The kit for 200 - 230V systems includes cable shoe options for 16mm^2, 25mm^2 and 35mm^2 cables - you should choose the most appropriate solution for the size of cable that you are using.*

7. If coding pins are supplied, fit them to the connector block according to voltage variant as shown in the appropriate figure.
8. Refit the outer cover to the connector block then tighten the strain relief bush.

Note: *Harting (the manufacturer of the connector) states that after initial assembly, the recommended tightening torque must only be reapplied once in order to avoid damage to the individual cable strands.*

9. The pumping system has an electrical connector locking mechanism (Figure 4, item 13) which requires use of a suitable screwdriver to release. Refer to Figure 11, the pumping system is supplied with a protective cover (item 5) fitted and the locking mechanism (item 1) may be applied. Follow these instructions to fit your electrical supply cable.
   - Slacken off the locking screw (item 3) by a few turns to loosen the locking mechanism if necessary.
   - Move the locking mechanism (item 1) to the left as far as possible, then lift it up so that it rotates around the pivot screw (item 2) and clears the left hand lever (item 4).
   - Push back both levers (item 4) to release the protective cover.
   - Remove the protective cover and fit your electrical supply cable.
   - Pull both levers back towards you to lock your electrical supply cable connector in place.
   - Push the locking mechanism down as far as possible and then push to the right so that it prevents the left hand lever from actuating.

© Edwards Limited 2012. All rights reserved.
Edwards and the Edwards logo are trademarks of Edwards Limited.

- Tighten the locking screw (item 3) to firmly hold the locking mechanism in place.
- Connect the other end of your electrical supply cable to your electrical supply through a suitable isolator.

Figure 8 - The Harting Han® K 4/4 cable-mounted connector

Low volt pin configuration

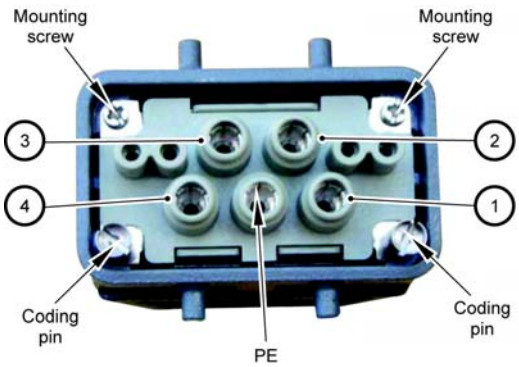

High volt pin configuration

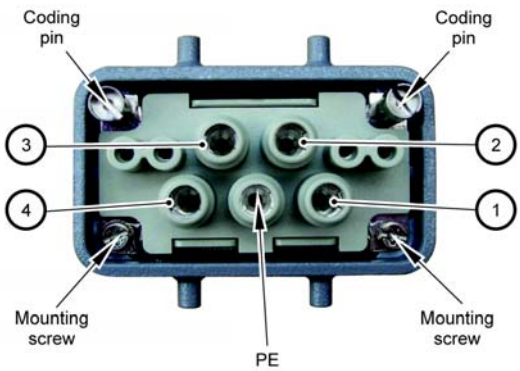

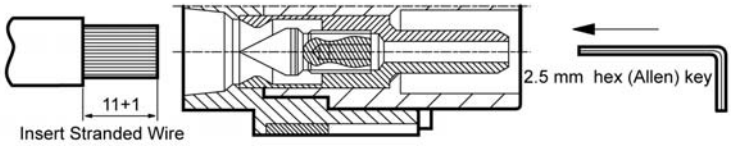

Pin identification

Pin 1	Phase 1
Pin 2	Phase 2
Pin 3	Phase 3
Pin 4	Not connected
PE	Protective earth

Torque settings for connector pins

Cable size (mm^2)	Max torque setting (Nm)
6	2
10	3
16	4

© Edwards Limited 2012. All rights reserved.
Edwards and the Edwards logo are trademarks of Edwards Limited.

Figure 9 - The Harting 100A axial screw module cable-mounted connector

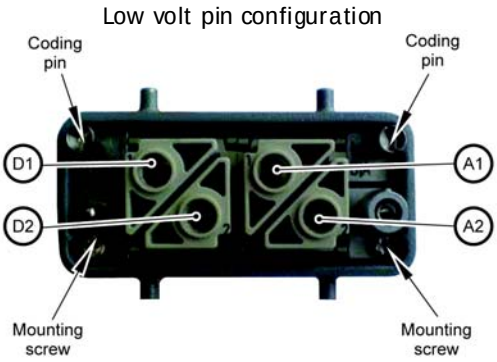

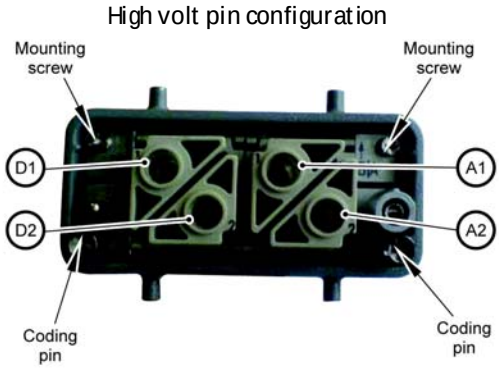

View from the cable side: connect the Protective Earth into the earth terminal

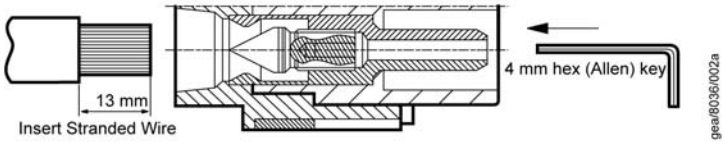

Pin identification

Pin A1	Phase 1
Pin A2	Phase 2
Pin D1	Not connected
Pin D2	Phase 3

Torque settings for connector pins

Cable size (mm^2)	Max torque setting (Nm)
10	6
16	6
25	7
35	8

© Edwards Limited 2012. All rights reserved.
Edwards and the Edwards logo are trademarks of Edwards Limited.

Figure 10 - Customer connection kit - combination low volts iXL750

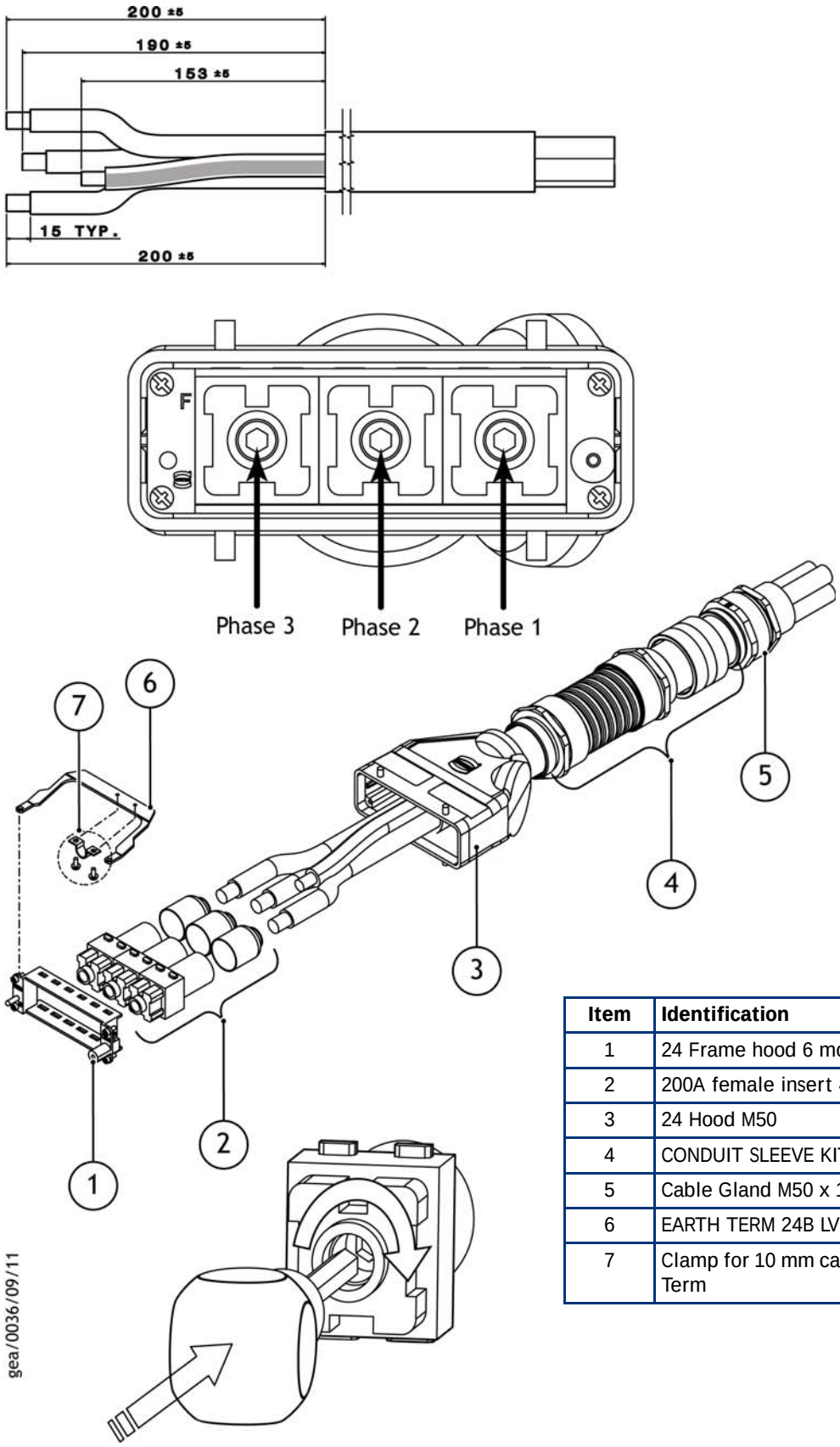

Item	Identification
1	24 Frame hood 6 module A-F
2	200A female insert 4-70 mm^2
3	24 Hood M50
4	CONDUIT SLEEVE KIT 50 MM LV iXL750
5	Cable Gland M50 x 1.5
6	EARTH TERM 24B LV CON KIT iXL750
7	Clamp for 10 mm cable diameter Ground Term

© Edwards Limited 2012. All rights reserved.
Edwards and the Edwards logo are trademarks of Edwards Limited.

Figure 11 - Electrical connector locking mechanism

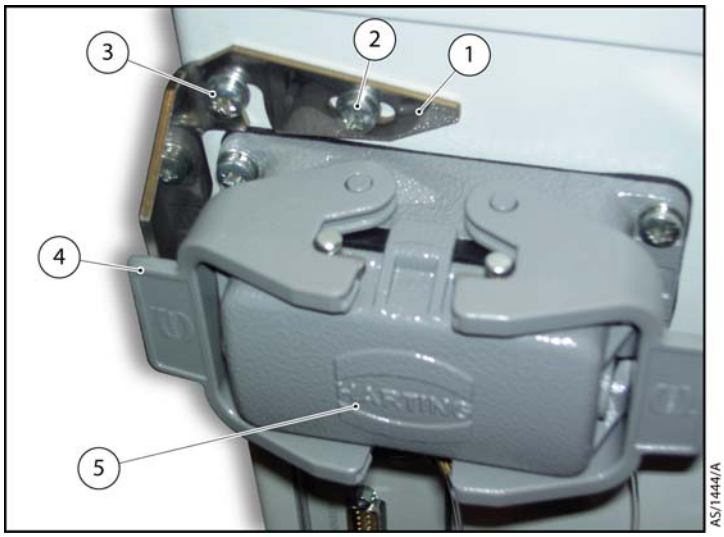

Item	Control/connector identification
1	Electrical connector locking mechanism
2	Pivot screw
3	Locking screw
4	Lever (2 off)
5	Protective cover

3.8 Connect an additional RF earth (ground) (optional)

If you will operate the system in an area subject to high RF (radio frequency) emissions, in accordance with good RF installation practice, we recommend that you:

- Use a star washer to connect the end of the earth (ground) cable (Figure 3, item 6) connected to the system inlet to one of the bolts that you use to secure the inlet-flange.
- Connect an additional earth (ground) cable to the RF earth (ground) stud (Figure 4, item 19). You must use a suitable low-impedance cable (for example, use braided cable).

3.9 Connect to your emergency stop circuit

The EMS (Emergency Stop) button on the front panel of the system (Figure 2, item 1) is used to stop the pump in an emergency.

Note: *Used on its own, the EMS does not isolate the electrical supply to the pumping system and so does not provide an EMO (Emergency Off) function.*

The pumping system has an external emergency stop circuit that can be connected into your own control equipment. (In this case, the emergency stop control should be compliant with IEC 60947-5-1, a red self-latching mushroom push button on a yellow background).

If you wish to operate the pumping system without connecting it to your own control equipment you must fit the external EMS link plug (supplied) to the EMS connection on the rear of the system (Figure 4, item 10). If you do not fit the EMS link plug the system will not operate.

If you require EMO functionality (for example, to satisfy the requirements of Semi S2) you can install the pumping system in combination with an Edwards Disconnect Box (available as an accessory, refer to Section 7.3). Refer to the Disconnect Box manual for installation instructions and information about the different ways the pumping system can be shut down in an emergency.

For pumps that are installed into an integrated system and receive their power from that system, an emergency off can be achieved by connecting the emergency stop circuit on the pump into the integrated system's emergency off circuit.

Refer to Section 4.6 for more information about pump behaviour after an emergency stop.

© Edwards Limited 2012. All rights reserved.
Edwards and the Edwards logo are trademarks of Edwards Limited.

3.10 Connect and set up the cooling-water

WARNING

Do not turn on the cooling-water supply until after you complete the electrical installation of the pump. If you do, condensation may form inside the enclosure and there may be a risk of electric shock.

Notes: *1. For optimum water-cooling, ensure that your cooling-water supply meets the specification given in Section 2.6. Ensure water supplies are connected in parallel. Refer to Figure 4, items 15 and 18. Edwards recommends that quick connectors be used to reduce the risk of water spillage during connection/ disconnection. Some pump variants are supplied with quick connector mating halves, otherwise they are available as an accessory kit, refer to Section 7.3.*

2. For minimum water consumption, regulate the cooling-water flow to the system.

Use the following procedure to connect the cooling-water supply and ensure that the system is receiving the correct water flow rate. Before you start, ensure that the electrical power supply to the system is switched off:

1. Use 3/8 inch BSP male pipe fittings to fit the female quick-release connector to the cooling-water supply hose and to fit the male quick-release connector to the cooling-water return hose.
2. Remove the dust-caps from the cooling-water inlet and outlet.
3. Connect your water return hose to the cooling-water outlet (Figure 4, item 18), fit a water flow meter into the water supply line close to the pump and then connect your water supply hose to the cooling-water inlet (Figure 4, item 15).
4. Turn on the cooling-water supply.
5. Switch on the electrical power to the system. The water valves in the pump cooling system will automatically open in a pre-determined sequence. 12 Seconds after power is switched on, all the main pump water valves will open for a period of 20 seconds.
6. Whilst the main pump water valves are open, adjust the water flow rate so that it meets the requirements given in Table 13. Note that the water valves will all close again after 20 seconds and the flow rate displayed by the water flow meter will decrease - this is normal. If necessary, cycle the power to the pump to re-open the valves for a further 20 seconds to continue setting the water flow rate.
7. Once the water flow rate has been set the water flow meter may be removed.
8. Inspect the water hoses, pipelines and connections and check that there are no leaks.

Turn off the water supply while you complete the remainder of the installation procedures.

© Edwards Limited 2012. All rights reserved.
Edwards and the Edwards logo are trademarks of Edwards Limited.

3.11 Accessories

WARNING

When fitting accessories inside the system enclosure, ensure that you switch off the pump and lock and tag out the electrical supply before removing the enclosure panels.

WARNING

The surfaces of the dry pump, booster and spools are very hot when the system is running. Allow these surfaces to cool to safe temperatures before installing accessories inside the system enclosure.

CAUTION

The power to the system must be switched off when the MicroTIM or active accessories module is installed or removed. If it is not, these modules may be damaged. Refer to the appropriate accessory manual for more information.

Refer to the individual accessories manuals for information about installation.

The disconnect box, when fitted, is used to energize and isolate the power to the system. It also allows the isolation of the electrical supply during an emergency and for maintenance and troubleshooting the system, thereby satisfying SEMI S2 requirements. The photohelic switch / gauge when fitted, allows monitoring for loss of extraction from the enclosure, thereby satisfying SEMI S2 requirements.

3.12 Commission the system

WARNING

During some application cycles it is possible that the system may exceed OSHA 1910.95 Occupational Noise Exposure Limits, the EU noise directive 2003/10/EC or other regional noise limits dependent upon the process, duty cycle, installation or environment in which the pumping system is being operated. A sound pressure survey must be conducted after installation and, if necessary, controls implemented to ensure that the relevant limits are not exceeded during operation and that adequate precautions are taken to prevent personnel from exposure to high noise levels during operation.

WARNING

The exhaust of T variant systems will heat up to maximum temperature as soon as the electrical supply is switched on.

1. Switch on the external electrical supply and check that the POWER LEDs (Figure 2, item 7 and Figure 4, item 4) go on. If the LEDs do not go on, contact Edwards.
2. Switch on the cooling-water and nitrogen supplies.
3. Ensure that the exhaust-extraction system is not blocked (for example, that valves in the exhaust-extraction system are open).
4. Ensure that all openings to atmospheric pressure in the foreline vacuum system are closed.
5. Press the LOCAL CONTROL button (Figure 2, item 5) and check that the green LOCAL CONTROL LED (Figure 2, item 6) comes on and then remains continuously illuminated.
6. Press START button (Figure 2, item 3)

© Edwards Limited 2012. All rights reserved.
Edwards and the Edwards logo are trademarks of Edwards Limited.

7. If the system starts and continues to operate, continue at Step 8. If a warning or alarm condition is indicated:
   - Shut down the system: refer to Section 4.3.
   - Contact Edwards.
8. Look at the pressure gauge in your inlet pipeline:
   - If the pressure is increasing, immediately shut down the system, and contact Edwards.
   - If the pressure is decreasing continue at Step 9.
9. After you have commissioned the system:
   - If you want to continue to operate the system, refer to Section 4.1.
   - Otherwise, shut down the system, refer to Section 4.3.

3.13 Install additional safety equipment

WARNING

If your Process Tool/control system needs to know the total flow rate of nitrogen to the system for safety reasons, install suitable measurement equipment in the nitrogen supply pipeline.

WARNING

If you use the nitrogen purges to dilute dangerous gases to a safe level, ensure that the system shuts down if the nitrogen supply to the system fails.

If the sensors or microprocessors fail, the total flow rate of nitrogen displayed or output by the pumping system may be incorrect. If you need to know the total flow rate of nitrogen to the dry pump for safety reasons, you should therefore fit suitable measurement equipment in the nitrogen supply pipeline. If you fit a rotameter, ensure that it is suitable for use with nitrogen and that it is correctly calibrated.

If the nitrogen supply to the pumping system fails, a warning message will be shown on the Pump Display Terminal (if fitted) and will be sent to any interfacing system connected to the pumping system. Ensure that your installation is configured so that it remains safe if there is a failure of the nitrogen supply to the pumping system.

If an alarm condition is detected (and the pumping system is not configured to ‘run til crash’ refer to Section 4.4) the pumping system will shut down automatically. You must ensure that your installation remains safe if the pumping system shuts down automatically.

© Edwards Limited 2012. All rights reserved.
Edwards and the Edwards logo are trademarks of Edwards Limited.

4 Operation

WARNING

Do not operate the system with the lifting eyebolts still fitted or with any enclosure panels removed or damaged and do not touch any parts of the pump(s) when the system is on. Surfaces of the pump(s) are very hot and can cause injury to people. In accordance with Semi S2, hot surface warning labels are applied to the side panels of some iXH T variants because testing has shown that accessible temperatures can exceed 65°C in small areas at worst case pressure conditions at an ambient temperature of 40°C. Under normal process operating conditions and an ambient below 25°C, accessible enclosure temperatures are unlikely to reach this level.

WARNING

Do not operate the system with any enclosures removed or damaged. If you do there may be a risk of an electric shock.

4.1 Start-up

WARNING

Ensure that it is safe to start the system. If you do not (and, for example, maintenance is being performed on components downstream of the system), you could cause injury to people.

WARNING

After the power is applied, all mains circuits will be energised.

WARNING

The exhaust of T variant systems will heat up to maximum temperature as soon as the electrical supply is switched on.

CAUTION

The system is designed to ride through transient term power interruption and to automatically restart once the power is restored.

CAUTION

Do not operate the pump if the pipeline is restricted or blocked as the pump will not operate correctly and may be damaged.

Refer to Section 1.4.

1. Switch on the cooling-water and nitrogen supply.
2. Switch on the electrical supply.
3. Check that the exhaust-extraction system is not restricted, and that any valves in the exhaust-extraction system are open.

The pump can be started using either the MicroTIM, the PDT or the front panel control.

© Edwards Limited 2012. All rights reserved.
Edwards and the Edwards logo are trademarks of Edwards Limited.

4.1.1 MicroTIM operation

If the system is to be operated by your own control equipment using the MicroTIM, ensure that no other devices have control of the pumping system. If they do, you must first release control before you can start the pump by the MicroTIM.

- Use your control equipment to set the pump start/stop signal to the interface connector and check that the Running LEDs are illuminated.
- The MicroTIM takes control. The message 'MTIM IN CONTROL' will be displayed on the PDT if connected. The green 'Tool Control' LED (Figure 4, item 9) on the rear panel will illuminate.

4.1.2 PDT operation

If the system is to be operated using the PDT:

- Connect the PDT to the required PDT connection, front (Figure 2, item 11) or rear (iXH/iXL only, Figure 4 item 5).
- Control must be taken with the PDT - press 'Control' button. The message 'PDT1 IN CONTROL' will be displayed if the front connection is used and the message 'PDT2 IN CONTROL' will be displayed if the rear connection of the iXH/iXL is used.
- Press START button (refer to Appendix A1 for more information).
- Press ENTER.
- The system will start and the Running LEDs on the pump and the Pump On LED on the PDT will flash whilst the pump is on and warming up. These LEDs will stop flashing and remain illuminated continuously when the pump has reached full speed.

4.1.3 Front panel control operation

To operate the system using the front panel controls (refer to Figure 2):

- Press and hold the 'Local Control' button (Figure 2, item 5). The Green 'Local Control' LED (Figure 2, item 6) will illuminate continuously when control is taken. The message 'Keys in Control' will be displayed on the PDT if connected.
- Press and hold the Start button (Figure 2, item 3) until the pumps starts. The Running LED (Figure 2, item 2) will flash whilst the pump is coming on and will remain illuminated continuously when the pump is running normally.

4.2 Status indicators

Refer to Figures 2 and 4.

© Edwards Limited 2012. All rights reserved.
Edwards and the Edwards logo are trademarks of Edwards Limited.

4.3 Manual shut-down

WARNING

If you shut the system down and don't isolate it from the electrical supply, do not disconnect the Pump Display Terminal or release control from the Pump Display Terminal or front panel. If you do the system could be started by another Module.

WARNING

Do not remove the inlet connections until the pump has been allowed to stop rotating and the power has been isolated. The pump can take up to three minutes to completely stop.

CAUTION

If you stop the pump without the nitrogen purge cycle, for example by using the EMS button, on processes that have condensable or solid by-products then the pump may not restart.

The pump can be shut down using either the MicroTIM, the PDT or the front panel controls. Note that only the item in control can stop the pump (refer to Section 1.4).

Note: *The EMS button will always stop the pump. It does not matter which item has control. Refer to Section 4.6.*

If the pump is not going to be required for some time, switch off the electrical supply and the cooling-water supply.

4.3.1 Shut-down modes

Auto shut-down introduces a nitrogen purge cycle which lasts for 15 minutes before the pump is shut down. This is the recommended shut-down mode.

Fast shut-down immediately stops the pump without gas purge.

Ramped shut-down is an optional mode for iXH. In some harsh applications, process residues can accumulate in the pump mechanism during shut-down, making it difficult to restart the pump next time. To prevent this problem a special ramped shut-down can be performed. Contact Edwards for more information.

4.3.2 MicroTIM operation

Use your control equipment to reset the pump start/stop signal to the interface connector. The Running LEDs will then go off, and the pump running status output signal will open.

4.3.3 PDT operation

Press the stop button on the PDT (refer to Appendix A1 for more information). You can choose whether to select Auto or Fast shut-down mode.

4.3.4 Front panel control operation

Press and hold the stop button (Figure 2, item 4) for 5 seconds to stop the pump in Auto shut-down mode (recommended, refer to Section 4.3.1 above). Repeat within 10 seconds to stop the pump in Fast shut down-mode. The running LED (Figure 2, item 2) flashes whilst the pump is slowing down and will then turn off when the pump has shut down.

© Edwards Limited 2012. All rights reserved.
Edwards and the Edwards logo are trademarks of Edwards Limited.

4.4 Automatic shut-down

CAUTION

If you select 'Run 'til crash', the pump(s) can be damaged and you may invalidate any warranties on the system equipment.

Normally, if an alarm condition exists, the control system will shut down the dry pumping system. For pumping systems containing a dry pump and booster combination, some alarms will cause only the booster to stop, and not the full system.

Notes:

1. *If required you can request 'Run 'til crash' operation. In this mode of operation, most alarm conditions will be ignored and the pump(s) will continue to operate. For safety reasons, some alarms cannot be overridden and the system will automatically shut down even if you have selected 'Run 'til crash'. Refer to Table 19.*
2. *'Run 'til crash' is automatically reset to 'off ' when the electrical supply is removed.*
3. *The Tool Interface overrides the 'Run 'til crash' state selected provided it has control of the pump.*

Table 19 - Alarm actions

Alarm Description	Alarm stops dry pump	Alarm stops booster pump	Alarm overrides 'Run 'til crash'
EMS or System Configuration (set-up) fault	Yes	Yes	Yes
Exhaust Pressure*	Yes	Yes	Yes
Booster Stator or End Cover Temperature†	No	Yes	No
Dry Pump Stator or End Cover Temperature*	Yes	Yes	No
Booster status†	No	Yes	Yes
Dry Pump status*	Yes	Yes	Yes

* *Not applicable to pXH systems.*
† *Not applicable to systems which do not contain a booster.*

© Edwards Limited 2012. All rights reserved.
Edwards and the Edwards logo are trademarks of Edwards Limited.

4.5 Unplanned shut-down and alarms

The system is fitted with a number of pump protection sensors that will give warnings and alarms, refer to Table 20.

Table 20 - Pump protection sensors

Sensor	Warning condition triggered	Alarm condition triggered
Exhaust pressure transducer		
- for iXH excluding systems containing the 450H dry pump	0.35 barg (5 psig)	0.55 barg (8 psig)
- for all systems containing iXH450H dry pump	0.2 barg (3.2 psig)	0.35 barg (5 psig)
- for all iXL 500 systems	0.3 barg (4.4 psig)	0.4 barg (5.8 psig)
DP TEMP		
- iXH systems containing 100 and 200 dry pumps:		
Standard	130 °C	140 °C
T variants	160 °C	170 °C
- iXH systems containing 200H dry pump:		
Standard and T variants	160 °C	170 °C
- iXH3030:		
Standard	160 °C	170 °C
T variant	170 °C	180 °C
- iXH systems containing 450H and 500H dry pumps:		
Standard and T variants	175 °C	185 °C
- iXL250Q	150 °C	165°C
- all iXL500 systems	139 °C	144 °C
- all iXL750 systems	180°C	190°C
DP TEMP 2		
- iXH3030T	140 °C	150°C
- iXH4550HT	145 °C	155 °C
- iXH6050HT	145 °C	155 °C
DP Endcover		
- iXH3030T	100°C	110°C
MB Stator		
- iXH610 only	60 °C	70 °C
- all other iXH and iXL variants	120 °C	130 °C
MB endcover, T variants only	100 °C	110 °C

Refer to Section 4.4 for information about alarms and automatic shut-down conditions.

If the system has an unplanned shut-down, ensure that the cause of the shut-down is identified and rectified before restarting. If you are in any doubt, contact Edwards.

Note: *The high temperature alarms on Edwards vacuum pumping systems are system protection trips and should be considered as an abnormal running condition. If a system has tripped due to any high temperature alarm the system should be investigated and the reason for the alarm established. Once the fault has been remedied the system should be left for a minimum of 30 minutes before attempting to restart.*

© Edwards Limited 2012. All rights reserved.
Edwards and the Edwards logo are trademarks of Edwards Limited.

4.6 Emergency stop

WARNING

For T variants only, the exhaust heaters will remain powered on even when the emergency stop is activated.

Note: *The emergency stop switch is not an electrical isolator.*

To shut down the system in an emergency, press the emergency stop switch (Figure 2, item 1). Alternatively, you can operate the emergency stop controls in your own control system if you have connected your emergency stop circuit to the system as described in Section 3.9.

When emergency stop is selected:

- The dry pump and/or the booster pump is switched off.
- The solenoid-valve(s) in the Gas Module close, to switch off the supply of nitrogen to the pump.
- The solenoid-valve(s) in the temperature control manifold(s) de-energise with loss of temperature control.
- The Pump Display Terminal will display '1.01 ALARM/STOP ACTIVATED' (if connected) or it may display 'ALARM 186.01/ DP INV 0040 000 / EMS'
- The Running LED will go off.
- The Alarm LED illuminates.
- For T variants, the exhaust heaters remain powered on.
- Booster heaters on T variants (where fitted) switch off.

4.7 Restart the pump after an emergency stop or automatic shut-down

Note: *If the system has automatically shut down because of high pump power, check that the pump is free to rotate before you restart the system: contact Edwards.*

If you have used the emergency stop switch on the front panel to shut down the system, you must reset the emergency stop switch before you can restart the system. Turn the emergency stop switch to reset it, then restart the system as described in Section 4.1.

If the system has been automatically shut down because of an alarm condition, the alarm condition must be rectified before you can restart the system. Restart the system as described in Section 4.1.

4.8 Advanced control and monitoring

FABworks is a tool that can be used to monitor pumping systems over a network. Contact Edwards for more information.

For advanced applications, Edwards has a tool that allows the pumping system configuration to be changed. Contact Edwards for more information.

For some applications it may be desirable to adjust the system operating temperatures to suit process demands. Contact Edwards to discuss your requirements and refer to Section 5.7 for instructions on configuration.

© Edwards Limited 2012. All rights reserved.
Edwards and the Edwards logo are trademarks of Edwards Limited.

5 Maintenance

WARNING

Only personnel specially trained to perform electrical maintenance should attempt troubleshooting inside electrical enclosures. These enclosures contain hazardous voltages and are not operator areas.

WARNING

Leak test the system after maintenance and seal any leaks found to prevent leakage of dangerous substances out of the system and leakage of air into the system.

5.1 Safety and maintenance frequency

WARNING

Obey the safety instructions given below and take the appropriate precautions. If you do not, you can cause injury to people and damage to equipment.

WARNING

Electrical, nitrogen and water supplies are all potentially hazardous energy sources. Before carrying out any maintenance the supply of these sources should be locked and tagged out.

WARNING

Do not touch the pump exhaust and check-valve (if fitted) whilst the pump is running since the temperatures of these parts can cause burns. These parts will remain hot after the pump has stopped.

WARNING

Personal protective equipment should be checked and used as specified by its supplier. Hazardous chemicals that have been pumped are located within the pumps and piping. Use of suitable protective gloves and clothing along with a respirator is recommended if contact with substances is anticipated. Particular caution should be exercised when working with fluorinated materials which may have been exposed to temperatures greater than 260 °C. Refer to Edwards Material Safety Data Sheets for detailed information.

- Ensure that the maintenance technician is familiar with the safety procedures which relate to the products pumped.
- Allow the pumps to cool to a safe temperature before you fit lifting eye bolts or start maintenance work.
- Vent and purge the dry pumping system with nitrogen before you start any maintenance work.
- Isolate the dry pumping system and other components in the process system from the electrical supply so that they cannot be operated accidentally. Note that the emergency stop switch on the dry pumping system is not an electrical isolator, unless a disconnect box accessory is installed.

© Edwards Limited 2012. All rights reserved.
Edwards and the Edwards logo are trademarks of Edwards Limited.

- Wait for at least four minutes after you have switched off the electrical supply before you touch any electrical component on the dry pumping system.
- Route and secure cables, hoses and pipelines during maintenance to avoid possible risk of trips or entrapment.
- Ensure that any oil or water collected in the secondary containment drip tray is removed before moving the system.
- The enclosure panels should only be removed with the use of a special tool, when the pump system has been stopped and allowed to cool sufficiently (as an indication the system should be left for one hour with cooling water still connected with flow characteristics as defined in Section 2).
- Wear the appropriate safety-clothing when you come into contact with contaminated components. Dismantle and clean contaminated components inside a fume-cupboard.
- Re-check the pump rotation direction if the electrical supply has been disconnected.
- O-ring replacement intervals vary depending on your application.
- Dispose of components, grease and oil safely.
- Take care to protect sealing-faces from damage.
- Do not touch or inhale the thermal breakdown products of fluorinated materials which may be present if the system has been overheated to 260 °C and above. These breakdown products are very dangerous. Fluorinated materials in the system may include oils, greases and seals. The system may have overheated if it was misused, if it malfunctioned or if it was in a fire. Edwards Material Safety Data Sheets for fluorinated materials used in the pump are available on request.

The system requires little user maintenance. Pump protection sensors fitted to the system do not require routine maintenance. The maintenance operations you can carry out are described in the following sections, any other maintenance must be carried out by Edwards service centres (refer to Section 7). The frequency of maintenance operations depends on your process. Adjust the frequency of maintenance operations according to your experience.

When you maintain the system, use replacement parts, seals and fittings supplied by Edwards, refer to Section 7. Ensure that your nitrogen and cooling-water supplies are connected in parallel and that they meet the specifications given in Section 2. Contact Edwards for more information.

5.2 Relocate the system for maintenance

WARNING

The substances that accumulate in the exhaust-pipe, elbow and check-valve can be dangerous. Do not allow these substances to come into contact with your skin or eyes. Do not inhale vapours from these substances. Fit blanking caps to the inlet and outlet flanges when you move the exhaust pipe, elbow or check-valve around your workplace.
The majority of synthetic oils/grease can cause inflammation of the skin (dermatitis). Safety precautions must be taken to prevent prolonged skin contact with these substances. Use of suitable protective gloves and clothing along with a respirator is recommended if contact with the substance is anticipated. System process gases and residue can be highly toxic. Take all necessary precautions when handling components that have, or could have, come into contact with them, including O-rings, lubricants and all exhaust accessories.

WARNING

You must use suitable lifting equipment to move the system. It is too heavy to lift by hand.

© Edwards Limited 2012. All rights reserved.
Edwards and the Edwards logo are trademarks of Edwards Limited.

WARNING

Do not exceed the topple angle of 10 ° when moving the pump. Wheel the system on its castors to move it into its operating position. The system should only be wheeled short distances over flat surfaces. If the floor surface is uneven or has obstacles the system should be lifted with suitable lifting equipment. If lifting the system is impractical, or there are other site difficulties, please consult Edwards for further advice.

CAUTION

Drain the cooling-water from the system if you will transport or store it in conditions where the cooling-water could freeze. If you do not, cooling-water may freeze in the system and damage the pump(s) and/or the cooling-water pipelines.

If you want to remove the system from its operating location and move it to another location where you will do maintenance, use the following procedure:

1. Purge the system and shut down as described in Section 4 and allow the system to cool down.
2. Isolate the power and then disconnect the mating-half from the electrical supply connector, then isolate the water and the gas purge supply.
3. Switch off your nitrogen and cooling water supplies. Disconnect the nitrogen supply, taking care as any trapped gas under pressure is released. Disconnect the cooling-water supply followed by the cooling-water return.
4. Disconnect the inlet and outlet from the vacuum and exhaust systems and fit blanking caps.
5. If necessary, disconnect the air-extraction port from your factory extraction system.
6. If necessary disconnect any accessories from the system.
7. Adjust the levelling feet so that the system rests on the castors.
8. Move the system to the location where you will do maintenance.

After maintenance is complete, re-install the system as described in Section 3.

5.3 Draining the cooling water

WARNING

Use of suitable protective gloves and eye protection is recommended when carrying out this procedure. Personal protective equipment should be checked and used as specified by its supplier.

WARNING

The exhaust of T variant systems will heat up as soon as the electrical supply is switched on.

1. Relocate the system for maintenance as stated in Section 5.2.

© Edwards Limited 2012. All rights reserved.
Edwards and the Edwards logo are trademarks of Edwards Limited.

2. Connect a regulated clean dry air supply (5 barg or 73 psig) to the cooling water supply connection (Figure 4, item 15). Do not turn on the air supply yet.
3. Connect a drain hose to the cooling water return connection (Figure 4, item 18). Position the open end of the drain hose in a suitable collection container.
4. Turn on the clean dry air supply.
5. Monitor the drain hose outlet until no further cooling water is purged.
6. Fit the external EMS link plug (supplied) to the EMS connection on the rear of the system (Figure 4, item 10). If you do not, you will not be able to purge the water system effectively.
7. Connect the system to a suitable mains electrical supply. The control system will now open each temperature control valve, purging the cooling water from all flow paths. After two minutes, remove the electrical supply. Wait for 10 seconds and then re-connect the electrical supply and repeat the entire process. Continue repeating until no further cooling water is purged from the system.
8. The cooling water drain procedure is now complete. Disconnect the air supply, electrical supply and the drain hoses. Dispose of the drained cooling water appropriately.

5.4 General maintenance

CAUTION

Do not use cleaning materials based on strong alkalis, aggressive or chlorinated solvents. Do not use cleaning materials containing abrasives.

The system is given a charge of oil before it leaves the factory. You should not need to check or adjust oil levels between major overhauls.

We recommend that you carry out a monthly visual inspection of the system in situ. Check that the cables, hoses and pipelines bringing services to the pump are in good condition and ensure that all connections are secure.

The following maintenance can also be carried out on the system, contact Edwards for details and training:

- Inspect the connections, pipelines, cables and fittings inside the pump enclosure, refer to Section 5.5.
- Inspect and clean exhaust pipe, elbow, and check valve

Note: *The system is supplied with either a trapped O-ring or a metal seal for the exhaust connection, depending on pump type and anticipated exhaust temperatures. Ensure that you always replace seals with the same type.*

5.5 Inspect the connections, pipelines, cables and fittings

WARNING

Electrical, nitrogen and water supplies are all potentially hazardous energy sources. Before carrying out any maintenance the supply of these sources should be locked and tagged out.

If the system is not relocated for maintenance, ensure all supplies are locked out and tagged out before starting the following procedure.

1. Remove the enclosure side and top panels.
2. Check that all the connections are secure; tighten any loose connections. Inspect all cables, pipelines, hoses and connections and check that they are not corroded or damaged and do not leak; repair or replace any pipelines, hoses and connections that are corroded or damaged, or which leak.
3. Refit the enclosure side and top panels.

© Edwards Limited 2012. All rights reserved.
Edwards and the Edwards logo are trademarks of Edwards Limited.

5.6 Gas module configuration

The gas module configuration may be adjusted to suit process demands.

5.6.1 iXH single mode and single mode+

The iXH Single Mode gas module has 2 manually-adjustable operational modes:

- Medium
- Harsh

In addition to this, the Single Mode + gas module has a further operational mode:

- Harsh + Inlet

The factory default setting for all gas modules is Harsh, except for the iXH1220H and iXH1820H models which contain the SM+96 gas module set to Medium.

Contact Edwards service personnel for instructions on how to access the configuration menu (via the PDT) and for process-specific recommendations.

Use the following procedure to change the gas module mode:

1. Remove the left hand side panel of the pumping system.
2. Identify the gas module (Contact Edwards for guidance).
3. Use a short flat-blade screwdriver to turn the adjustment screw on the front of the gas module by 1/4 turn.
4. If adjustment screw slot is vertical then turn clockwise for medium mode.
5. If adjustment screw slot is horizontal then turn anticlockwise for harsh mode.
6. Refit side panel.
7. Access the Config menu on the PDT (requires an access code, contact Edwards).
8. Scroll down to Gas Process - press ENTER.
9. Scroll through options Harsh / Med / Harsh + Inlet - use ENTER to select desired option.
10. Scroll down to Default N_2 Setup - press ENTER.
11. PDT displays: Set Default Yes (Press Enter) - confirm default - Press ENTER.

5.6.2 Multi mode

The iXH and iXL Multi Mode gas modules have a number of electronically-adjustable operational modes:

- Medium
- Harsh
- +Inlet purge
- +Exhaust purge

Contact Edwards service personnel for instructions on how to access the configuration menu (via the PDT) and for process-specific recommendations.

© Edwards Limited 2012. All rights reserved.
Edwards and the Edwards logo are trademarks of Edwards Limited.

Use the following procedure to change the gas module mode:

1. Access the Config menu on the PDT (contact Edwards for advice).
2. Scroll down to Gas Process - press ENTER.
3. Scroll through options to choose gas process - use ENTER to select desired option.
4. Scroll down to Default N_2 Setup - press ENTER.
5. PDT displays: Set Default Yes (Press Enter) - confirm default - Press ENTER.

5.6.3 iXL variants

iXL variants are not fitted with gas modules.

5.7 System operating temperature configuration

The system operating temperature configuration may be adjusted to suit process demands. Contact Edwards service personnel for instructions on how to access the configuration menu (via the PDT) and for process-specific recommendations.

Use the following procedure:

1. Access the Config menu on the PDT (requires an access code, contact Edwards).
2. Scroll to Temp Setpoints – press ENTER.
3. Scroll to Set DP Temp or Set MB Temp – press ENTER.
4. Scroll to desired temperature – Press ENTER.

Notes: *1 The Dry Pump set point is the desired surface temperature of the internal low vacuum stage.*

2 The Booster set point is the temperature of the booster stator at which additional cooling is deployed to control booster temperatures. The booster will not necessarily reach the set point temperature at ultimate conditions.

Refer to Table 21 for default temperature settings and ranges.

Table 21 - Dry pump and booster temperature settings

Temperature Setting	Range in which temperature can be set (°C)	Default value (°C)
Standard iXH dry pump	70 - 135	110
iXH T variants containing 450H and 500H dry pump	110 - 150	140
iXH3030T	110 - 160	160
All other iXH T variants	110 - 150	150
iXL250Q dry pumps	-	105
iXL 500 dry pumps	126 - 136	131
iXL750Q dry pumps	-	120
Booster (except iXH610)	60 - 100	100
Booster (iXH610 only)	0 - 55	55

© Edwards Limited 2012. All rights reserved.
Edwards and the Edwards logo are trademarks of Edwards Limited.

6 Transportation, storage and disposal

6.1 Transportation

WARNING

Do not drain the oil from the pump(s) whether dangerous substances have been pumped or not. You must fit blanking plates to seal all vacuum inlet and outlet ports (to prevent possible oil leakage). You must ensure that the system is correctly labelled, if in doubt contact Edwards.

Follow the procedure laid out in Section 6.2 and then read form HS1 and fill out form HS2, which can be found at the back of this manual.

6.2 Storage

Drain the cooling-water from the system if you will transport or store it in conditions where the cooling-water could freeze (refer to Section 5.3). If you do not, the cooling-water may freeze in the system and damage the pump(s) and/or the cooling-water pipelines.

Store the system as follows:

1. Follow the procedure set out in Section 5.2.
2. Store the system in clean dry conditions until required.
3. When required for use, prepare and install the system as described in Section 3 of this manual.

6.3 Disposal

WARNING

Dispose of the system and any components safely and in accordance with all local and national safety and environmental requirements.

This equipment may contain a lithium manganese dioxide battery which, under California law, requires notification for the presence of perchlorate: Perchlorate Material - special handling may apply, refer to www.dtsc.ca.gov/hazardouswaste/perchlorate/

Edwards products are supported by a world-wide network of Edwards Service Centres. Each Service Centre offers a wide range of options including disposal. Refer to Section 7.2 for more information.

Pump system materials suitable for recycling include cast iron, steel, PTFE, stainless steel, brass, aluminium, zinc alloy, nickel, mild steel, ABS, polyamide.

Take particular care with the following:

- Fluoroelastomers which may have decomposed as the result of being subjected to high temperatures.
- Components which have been contaminated with dangerous process substances.
- Lithium battery.

© Edwards Limited 2012. All rights reserved.
Edwards and the Edwards logo are trademarks of Edwards Limited.

This page has been intentionally left blank.

© Edwards Limited 2012. All rights reserved.
Edwards and the Edwards logo are trademarks of Edwards Limited.

7 Service, spares and accessories

7.1 Introduction

WARNING

Whenever you return the system to an Edwards Service Centre or other Edwards company, you must comply with the requirements of Section 7 and with the requirements of the Return of Edwards Equipment Procedure (refer to forms HS1 and HS2 at the rear of this manual).

Note: *You must not drain the oil from the pumping system. You must clearly state the pump is full of oil when you complete form HS2.*

Edwards products, spares and accessories are available from Edwards companies and distributors world-wide. These centres employ Service Engineers who have undergone comprehensive Edwards training courses. Order spare parts and accessories from your nearest Edwards company or distributor. When you order, please state for each part required:

1. Model and Item Number of your equipment
2. Serial number (if any)
3. Item Number and description of the part.

7.2 Service

Edwards products are supported by a world-wide network of Edwards Service Centres. Each Service Centre offers a wide range of options including: equipment decontamination; service exchange; repair; rebuild and testing to factory specifications. Equipment that has been serviced, repaired or rebuilt is returned with a full warranty. Your local Service Centre can also provide Edwards engineers to support on-site maintenance, service or repair of your equipment. For more information about service options, contact your nearest Service Centre or other Edwards company.

© Edwards Limited 2012. All rights reserved.
Edwards and the Edwards logo are trademarks of Edwards Limited.

7.3 Ordering accessories

Table 22 - Accessories

Description	Item Number
Seismic bracket kits (refer to Table 23):	A50767000 or A50768000
Retrofit kit to enable installation of iXH in place of iH1000:	
For iXH1210 and iXH1210H	A50769000
For iXH1220H	A50770000
Exhaust extraction cover kit:	
For NW40 exhaust	A50780000
For NW50 exhaust	A50791000
Exhaust Check Valve Kits:	
NW40 (refer to Table 24)	A50782000 or A50787000
NW50, PTFE Disc type (for iXL systems)	A50790000
Nitrogen flow switches:	
Suitable for 0 - 60 slm	A50784000
Suitable for 0 - 204 slm	A50785000
Utilities kit (contains mating half quick connectors for cooling water and electrical connector mating parts):	
Kit suitable for 380 - 460V systems using the Harting Han® 100A axial screw module mains connector	A50788000
Kit suitable for 200 - 230V systems using the Harting Han® 100A axial screw module mains connector	A50789000
Kit suitable for all systems using the Harting Han® K4/4 mains connector	A50795000
Photohelic switch and gauge kit	A50803000
Disconnect box (used with photohelic):	
200 – 230 V 60 A max (suitable for systems with the Harting Han® K4/4 mains connector)	A50802000
200 – 230 V 100 A max (suitable for systems with the Harting Han® 100A axial screw module mains connector)	A50804000
pXH drip tray (used to fully satisfy SEMI S2 requirements)	Contact Edwards
Accessory modules:	
Active Accessory Module (AAM)*	D37480500
Passive Accessory Module (PAM)*	D37480550
PDT	D37280700

** AAM includes a PAM*

If you wish to restrain your system using seismic brackets you will need to order the correct brackets for your particular system, refer to Table 23.

© Edwards Limited 2012. All rights reserved.
Edwards and the Edwards logo are trademarks of Edwards Limited.

Table 23 - Seismic bracket kits

Seismic bracket kit	A50767000*	A50768000	M56930012
Pumping system models	iXH100 iXH200H iXH610 iXH1210/H iXH1220H/T iXH1820/H /T	iXH450H iXH500H iXH3030/T iXH3045H iXH3050H iXH4545HT iXH4550HT iXH6045H/T iXH6050H/T pXH4500 pXH6000 iXL500Q iXL500R	iXL250Q iXL750Q iXL750R

* *The systems that use the seismic bracket kit A507-67-000 may be restrained using only 2 seismic brackets if desired, as described in Section 3.1.*

Note: *If you wish to use an exhaust check valve on a system with an NW40 exhaust, you will need to order the correct kit for your particular system, refer to Table 24.*

Table 24 - Exhaust check valve kits

Exhaust Check Valve Kit	A50782000	A50787000
Pumping system models	iXH100 iXH200H iXH610 iXH1210 /H iXH1220H /T iXH1820 /H /T iXH3030 /T	iXH450H iXH500H iXH3045H iXH3050H iXH4545HT iXH4550HT iXH6045H /T iXH6050H /T

© Edwards Limited 2012. All rights reserved.
Edwards and the Edwards logo are trademarks of Edwards Limited.

This page has been intentionally left blank.

© Edwards Limited 2012. All rights reserved.
Edwards and the Edwards logo are trademarks of Edwards Limited.

Appendix A1 Pump display terminal

The PDT accessory provides pump on/off and status reporting. Warnings and alarms are also indicated to the user. Up to two PDTs may be fitted to iXH and iXL systems, up to one PDT may be fitted to pXH systems.

Figure A1 - Pump display terminal

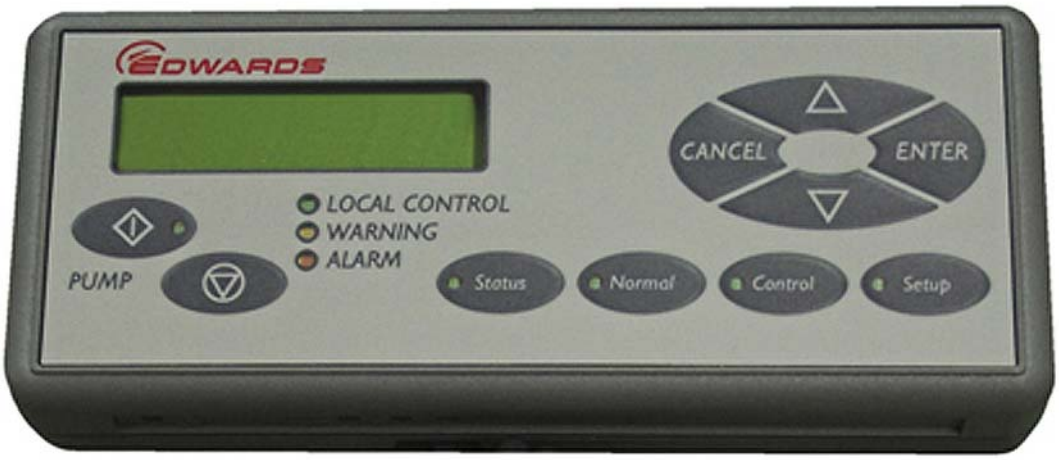

A1.1 LEDs

Local Control Green illuminates continuously when this PDT has control of the pump.

Pump ON Green (within the Pump Start button) illuminates to indicate that the pump is running.

Warning Yellow illuminates to indicate that a pump warning is present. It flashes when a new warning occurs until it is acknowledged by pressing 'ENTER' when it goes continuous until the warning clears.

Alarm Red illuminates to indicate that a pump alarm is present. It flashes when a new alarm occurs until it is acknowledged by pressing 'ENTER' when it goes continuous until the alarm clears.

A1.2 Pump start / stop and control

To Start or Stop the pump the PDT must be in control, indicated by the **Local Control** LED being illuminated.

To take or release control briefly press **Control**.

If something else is in control, error message 'Control locked' appears, refer to 'Control Holder' in the **Status** menu.

Press **Start** button PDT displays:

Table A1 - Pump start control

Pump State	Local Control LED	PDT display	Operator	Pump response
Stopped	On	START MENU Start Pump	Press **ENTER** to confirm	Pump Starts
Running	On	Pump Running Press CANCEL	Press **CANCEL**	No change (running)
Stopped or Running	Off	No PDT Control Press CANCEL	Press **CANCEL**	No change

© Edwards Limited 2012. All rights reserved.
Edwards and the Edwards logo are trademarks of Edwards Limited.

Press **Stop** button PDT displays:

Table A2 - Pump stop and control

Pump State	Local Control LED	PDT display	Operator	Pump response
Stopped	On	PUMP Stopped Press CANCEL	Press **CANCEL**	No change (stopped)
Running	On	STOP MENU Fast Shutdown	If Auto Shutdown is required press down arrow. Press **ENTER** to confirm	Pump Stops
Stopped or Running	Off	No PDT Control Press CANCEL	Press **CANCEL**	No change

A1.3 Warning / Alarm display and acknowledgement

Each new warning / alarm is displayed when it occurs, overwriting any text already present unless another unacknowledged warning / alarm is currently being displayed. The corresponding **Warning / Alarm** LED flashes to indicate a new warning / alarm.

Pressing **ENTER** acknowledges the warning / alarm currently displayed and the **Warning** / **Alarm** LED stops flashing. If available the display will show the suggested action, press **ENTER** again to clear.

If there is another new warning or alarm the **Warning** / **Alarm** LED will continue to flash and this is then displayed, otherwise the display will revert to the original text from before the alarm(s) / warning(s) occurred.

If there are warnings / alarms still present, but they are all acknowledged, then the corresponding LED remains continuously illuminated. The text indicating acknowledged warning / alarm conditions still present may be viewed in the **Status** menu, see below. Some Alarms such as 1.01 STOP ACTIVATED remain present until the pump is manually started from the PDT or front panel controls.

Once all warning/alarm conditions have gone away, then the corresponding LED is extinguished.

To avoid a build up of out of date Warnings they are automatically acknowledged after 36 hours.

A1.4 Menus

There are three menu buttons **Normal, Status** and **Setup** described below.

NR in the data part of a parameter indicates No Reading.

NP in the data part of a parameter indicates a parameter that is Not Present.

A1.4.1 Normal menu

This menu is displayed when the PDT is first plugged into the pump, or accessed by pressing the **Normal** button. Up to 4 parameters are displayed, scroll by pressing up/down keys.

Table A3 - Normal menu

Description	Typical Display
Serial Number	S/N 1234567
Control Holder	NONE IN CONTROL
Dry Pump current	DP CURRENT 1.1A
Booster current	MB CURRENT 1.1A

© Edwards Limited 2012. All rights reserved.
Edwards and the Edwards logo are trademarks of Edwards Limited.

By default the 4 parameters displayed in the Normal menu are as shown above for the iXH, these may be changed via the Edit Display attributes menu, accessed from the **SETUP menu.** For the pXH, the default Normal menu is as shown below.

Table A4 - Normal menu

Description	Typical Display
Serial Number	S/N 1234567
Control Holder	NONE IN CONTROL
pXH booster current	PB CURRENT 1.1A
Dry pump current	DP Current NP

A1.4.2 Status menu

Press the **Status** button to enter. Scroll by pressing up/down keys. Press **CANCEL** to exit back to **Normal** menu.

If a device is not fitted the associated parameters will not be displayed. Parameters displayed:

Table A5 - Status menu

Description	Typical Display	
Serial Number*	S/N 1234567	
Control Holder	NONE IN CONTROL	
Dry Pump current	DP CURRENT	1.1A
Booster current	MB CURRENT	1.1A
pXH Booster current	PB CURRENT	1.1A
Green Mode state	GREEN MODE STATE	Off
Gate valve open/closed state	GATE VALVE	Open
Remote Gate valve open/closed state	PB VALVE	Open
Dry pump stator reference temperature	TCS REF	100C
Dry Pump temperature	DP TEMP	100C
Dry Pump exhaust stage temperature	DP EXH STG	100C
Dry Pump End Cover temperature	DP E/C TEMP	100C
Dry Pump temperature 2	DP TEMP 2	100C
Booster Temperature	MB TEMP	100C
Booster MB End Cover temperature	MB E/C TEMP	100C
pXH Booster Temperature	PB TEMP	100C
pXH End cover Temperature	PB E/C TEMP	100C
N_2 Flow Rate	N_2 FLOW	44 slm
Dry Pump Power	DP POWER	1.1 kW
Booster Power	MB POWER	1.1 kW
pXH Booster Power	PB POWER	1.1 kW
Dry Pump speed in percent	DP SPEED	100 %
Dry Pump speed in Hz	DP SPEED	100 Hz
Booster speed in percent	MB SPEED	100 %
Booster speed in Hz	MB SPEED	100 Hz
pXH Booster speed in percent	PB SPEED	100 %

© Edwards Limited 2012. All rights reserved.
Edwards and the Edwards logo are trademarks of Edwards Limited.

Table A5 - Status menu (continued)

Description	Typical Display	
pXH Booster speed in Hz	PB SPEED	100 Hz
Dry Pump Inverter Temperature	DP INV TEMP	100C
Booster Inverter Temperature	MB INV TEMP	100C
pXH Booster Inverter Temperature	PB INV TEMP	100C
Dry Pump Exhaust pressure	EXHAUST	5 PSI
Dry Pump Exhaust Temperature	EXH PIPE	100C
Dry Pump Exhaust gas temperature	EXH TEMP	100C
Active gauge pressure	AG 1.1E-3 kPa	
Water Flow Rate	WATER	11.1 l/m
Run Hours	RUN HOURS	1000
pXH Run Hours	PB RUN HOURS	1000
Number of Pump Starts	PUMP STARTS	100
Time to Stop (seconds)	TIME TO STOP	900
Active Alarms and Warnings (if present)		

* *The PDT returns the serial number of the system it is plugged directly into. For example, if an iXH is being used to control a pXH, the PDT can be plugged into either system. If it is plugged into the iXH, it returns the serial number of the iXH and if it is plugged into the pXH it returns the serial number of the pXH.*
All warning and alarm codes from the iXH dry pump and booster are in the range 101.01 to 799.15.
All warning and alarm codes from the pXH booster are in the range 801.01 to 899.15.

A1.4.3 SETUP menu

Press the **Setup** button to enter. Menu title is shown at the top of the display. Scroll by pressing up/down keys. Press **ENTER** to open a sub menu or **CANCEL** to exit back to **Normal** menu.

Table A6 - SETUP menu

Description	Display
Commands menu*	Command Menu...
Display Inverter Fault History menu	Inv Fault Hist...
Software Version Display menu	S/W Version...
Display Serial Number	Serial Num...
Fit Accessory menu*	Fit Accessory...
Edit IP configuration menu	IP Config...
Edit Display attributes menu	Display Attr...
Set Time and Date†	Set Clock...
Display Pump Type	Show Pump type...

* *This option requires a security code to access it.*
† *Time is set automatically when connected to a Fabworks network.*

Each sub menu is described below.

© Edwards Limited 2012. All rights reserved.
Edwards and the Edwards logo are trademarks of Edwards Limited.

A1.4.4 COMMANDS menu

Under the Setup menu. Scroll by pressing up/down keys. Press **ENTER** to open a sub menu or **CANCEL** to exit back to the **SETUP** menu.

Table A7 - COMMANDS menu

Gate Valve (Open/Shut)*
MB Pump (On/Off)†
PB Pump (On/Off)†
Green Mode (On/Off)†
Green Level (Idle/Sleep/Hibernate/Mode4..8)*
Gas Valves*

* *This option requires a security code to access it.*
† *The PDT must be in control to perform these functions.*

Press the up/down keys to select the new settings and press **ENTER** to accept or **CANCEL** to exit back to the **COMMANDS** menu.

A1.4.4.1 GAS VALVES menu

Scroll by pressing up/down keys. Press **ENTER** to open a sub menu or **CANCEL** to exit back to the **Setup** menu. Settings do not appear if they are not fitted.

Table A8 - GAS VALVES menu

Set N_2 Seal
Set Inlet 1
Set Bypass
Set Exhaust 2

Press the up/down keys to select on / off and press **ENTER** to accept or **CANCEL** to exit back to the **GAS VALVES** menu.

A1.4.5 INV FAULT HIST (Display Inverter Fault History) menu

Under the Setup menu. Scroll by pressing up/down keys. Press **ENTER** to open a sub menu or **CANCEL** to exit back to the **Setup** menu.

Table A9 - INV FAULT HIST (Display Inverter Fault History) menu

DP Inv Fault Hist (Dry Pump Inverter Fault History)
DP2 Inv Fault Hist (Dry Pump 2nd Inverter Fault History)
MB Inv Fault Hist (Booster Inverter Fault History)
PB Inv Fault Hist (pXH Booster Inverter Fault History)

Each inverter fault history contains up to 32 entries, each contains one alarm and one warning, where 1 is the most recent. Scroll by pressing up/down keys. Press **CANCEL** to exit back to the Inverter Fault History menu.

The inverter fault information is displayed in the following format:

DP Inv Fault nn
A:aaaa W:wwww

where nn is the number, aaaa is the alarm code, and wwww is the warning code.

Refer to Section A2.3 for more information about inverter warnings and alarms.

© Edwards Limited 2012. All rights reserved.
Edwards and the Edwards logo are trademarks of Edwards Limited.

A1.4.6 SOFTWARE VERSION Display menu

Under the Setup menu. Scroll through the software version loaded in the processors by pressing up/down keys. Press **CANCEL** to exit back to the **SETUP** menu.

A1.4.7 FIT ACCESSORY menu

Under the Setup menu. Scroll by pressing up/down keys. Press **ENTER** to open a sub menu or **CANCEL** to exit back to the **Setup** menu.

Table A10 - FIT ACCESSORY menu

Gate Valve...	
Water Sensor...	(Analogue water flow)
Active Gauge...	
Exh Gas Temp...	(Exhaust Gas Temperature)

For an accessory press the up/down keys to select Fitted or Not Fitted and press **ENTER** to accept or **CANCEL** to exit back to the **COMMANDS** menu.

Note: *Gate Valves additionally have an option of Fitted No Feedback for use where there are no position feedback switches fitted to the gate valve.*

To configure an accessory connected to the pXH, please contact Edwards.

A1.4.8 IP Configuration menu

Under the Setup menu. Scroll by pressing up/down keys. Press **ENTER** to open a sub menu or **CANCEL** to exit back to the **Setup** menu.

Table A11 - IP Configuration menu

Host_Name...	(display only)
DHCP Enable...	(Enabled / Disabled)*
IP Address...	(xxx.xxx.xxx.xxx)†
Address Mask...	(xxx.xxx.xxx.xxx)†
DNS Server...	(xxx.xxx.xxx.xxx)†
Gateway...	(xxx.xxx.xxx.xxx)†
NTP Server...	(display only)
SMTP Server...	(display only)
MAC Address...	(display only)
Domain Name...	(display only)

* *Press the up/down keys to select Enabled or Disabled and press **ENTER** to accept or **CANCEL** to exit back to the **IP Configuration** menu.*

† *For each address setting press the up/down keys to set the digit, press **ENTER** to accept and move to the next digit or **CANCEL** to move back to the previous digit. Pressing **ENTER** at the end of the line will accept the new setting and exit back to the Edit IP menu. Pressing **CANCEL** at the start of the line will cancel and exit back to the **IP Configuration** menu.*

Display only items press **CANCEL** to exit back to the **IP Configuration** menu.

© Edwards Limited 2012. All rights reserved.
Edwards and the Edwards logo are trademarks of Edwards Limited.

For systems which contain an iXH or iXL connected to a pXH, it is important to connect the PDT to the iXH or iXL if you wish to configure the iXH or iXL IP settings and to connect the PDT to the pXH if you wish to configure the pXH IP settings.

A1.4.9 Display attributes menu

Under the Setup menu. Scroll by pressing up/down keys. Press **ENTER** to open a sub menu or **CANCEL** to exit back to the **Setup** menu.

Table A12 - Display attributes menu

Normal display (Selects the parameters displayed in Normal)
Units...

SELECT LINE (Normal display selection menu)

Scroll by pressing up/down keys. Press **ENTER** to open a sub menu or **CANCEL** to exit back to the Display Attributes menu.

Table A13 - SELECT LINE (Normal display selection menu)

Top Page 1...
Bottom Page 1...
Top Page 2...
Bottom Page 2...

In each option the **SELECT PARAMETER** menu is opened, scroll through the parameters by pressing up/down keys. Press **ENTER** to select the parameter for display or **CANCEL** to exit back to the **SELECT LINE** menu.

UNITS (Units to display)

Scroll by pressing up/down keys. Press **ENTER** to open a sub menu or **CANCEL** to exit back to the Display Attributes menu.

Table A14 - UNITS (Units to display)

Pressure...	(PSI/kPa)
Temperature...	(Centigrade/Farenheit)
Speed...	(RPM/Hz)
Active Gauge...	(mBar/Torr/kPA)

In each option scroll through the units available by pressing up/down keys. Press **ENTER** to select the displayed units or **CANCEL** to exit back to the **UNITS** menu.

Note: *The configuration options for the PDT are stored in the PDT itself and are not associated with the pump that the PDT is connected to. This means a user can transfer a PDT between pumps and keep the same settings. It also means that different units could be displayed on two PDTs connected to the same pump.*

© Edwards Limited 2012. All rights reserved.
Edwards and the Edwards logo are trademarks of Edwards Limited.

This page has been intentionally left blank.

© Edwards Limited 2012. All rights reserved.
Edwards and the Edwards logo are trademarks of Edwards Limited.

Appendix A2 Troubleshooting

A2.1 Warnings

The pump controller generates a warning when a problem is encountered. Once the problem that caused a warning has been resolved, the warning is cleared by the pump controller.

A2.1.1 LED warning indicators

If the pump encounters a problem, warnings are indicated on the LEDs on the front control panel, the rear panel and on the PDT if fitted.

The warning LEDs on the front control panel and rear panel illuminate continuously when a warning is generated.

If a PDT is fitted, the warning LED flashes to indicate a new warning. Refer to Appendix A1.3 for more information on how warnings are indicated and how they can be acknowledged using the PDT.

Once all the warnings are cleared, the warning LEDs extinguish.

A2.1.2 PDT warnings

If a PDT is fitted, each warning triggers a warning message to be displayed. Refer to Appendix A1.3 for more information on how warnings are handled by the PDT.

Table A15 lists the warning messages that might be displayed on the PDT with possible causes and actions you should take.

Table A15 - Warnings

Warning Message on PDT	'Action' Message on PDT	Possible Cause	Action
Warning 1.01 Power interrupt	Check pwr supply	There has been a brownout of the electrical supply to the pump lasting more than 1 second.	Check the electrical supply
Warning 31.13 Gas missing	See manual	The gas module is not communicating with the pump controller.	Contact Edwards.
Warning 31.01 SYS CONFIG FAULT	See manual	The wrong type of gas module has been fitted.	Contact Edwards.
Warning 35.10 N2 Purge Low	Check N2 supply	The Nitrogen supply flow rate is too low - the supply might not be connected or switched on - the supply line or filter may be blocked	Check the Nitrogen supply is connected and switched on and that pipelines and filters are not blocked.
Warning 35.11 N2 Purge High	Check Gas Module	The Nitrogen supply flow rate is too high - the gas module and PDT settings do not match (for iXH Single Mode or Single Mode+)	Check the gas module and PDT settings, refer to Section 5.6.
		- the gas module may be faulty	Contact Edwards.
Warning 35.13 Sensor missing	-	The transducer is disconnected or has failed.	Contact Edwards.

© Edwards Limited 2012. All rights reserved.
Edwards and the Edwards logo are trademarks of Edwards Limited.

Table A15 - Warnings (continued)

Warning Message on PDT	'Action' Message on PDT	Possible Cause	Action
Warning 39.11 Exh Press High	Exhaust Blocked Service Pump	The pressure in the exhaust pipeline is too high. - A valve in the pipeline may be shut. - There may be process debris or condensation in the exhaust pipeline. -You may have too many pumping systems connected to the exhaust pipeline.	Refer to Section 4.5 to determine the exhaust pressure that triggered the warning. Check that all valves in the exhaust line are open and consider whether process debris or condensation are likely.
Warning 39.13 Sensor missing	-	The exhaust pressure transducer is not fitted, or is disconnected or has failed.	Contact Edwards.
Warning 51.13 Sup Missing	See manual	There is a communication problem within the pump controller. Refer to Section A2.4.1 for more information.	Cycle the power to the pump. If the warning persists, contact Edwards to replace the pump controller.
Warning 54.11 MB Temp High	See manual	The temperature of the booster pump is too high.	- Check that cooling water is connected, switched on and is to specification given in Section 2.6.
Warning 54.13 Sensor missing	-	The booster temperature sensor may have become disconnected or failed.	- Check that the sensor is fitted and is correctly connected.
Warning 55.13 Sensor missing	-	The dry pump temperature sensor may have become disconnected or failed.	- Check that the sensor is fitted and is correctly connected.
Warning 57.11 DP E/C Temp High	See manual	The temperature of the dry pump end cover is too high.	- Check that cooling water is connected, switched on and is to specification given in Section 2.6.
Warning 57.13 Sensor missing	-	The dry pump end cover temperature sensor may have become disconnected or failed.	- Check that the sensor is fitted and is correctly connected.
Warning 62.11 MB E/C Temp High	See manual	The temperature of the booster end cover is too high.	- Check that cooling water is connected, switched on and is to specification given in Section 2.6.
Warning 62.13 Sensor missing	-	The booster end cover temperature sensor may have become disconnected or failed.	- Check that the sensor is fitted and is correctly connected.
Warning 63.11 DP Temp High	See manual	The internal temperature of the pump is too high.	- Check that cooling water is connected, switched on and is to specification given in Section 2.6.
Warning 63.13 Sensor missing	-	The dry pump temperature sensor may have become disconnected or failed.	Contact Edwards.
Warning 70.11 DP Temp 2 High	See manual	The temperature of the pump is too high.	- Check that cooling water is connected, switched on and is to specification given in Section 2.6.

© Edwards Limited 2012. All rights reserved.
Edwards and the Edwards logo are trademarks of Edwards Limited.

Table A15 - Warnings (continued)

Warning Message on PDT	'Action' Message on PDT	Possible Cause	Action
Warning 70.13 Sensor missing	-	The dry pump temperature sensor may have become disconnected or failed.	- Check that the sensor is fitted and is correctly connected.
Warning 71.13 AC Sup Missing	See manual	The pump controller cannot communicate with the accessory module	- Check that the accessory module is correctly connected to the pump and then cycle the power to the pump. - If this warning persists, contact Edwards.
Warning 84.11 Exh Temp High	See manual	The exhaust pipe temperature is too high	Contact Edwards
Warning 84.13 Sensor missing	-	The exhaust pipe temperature sensor may have become disconnected or failed.	Contact Edwards
Warning 152.01 Valve Not Shut	Check Gate Valve	The foreline gate valve has failed to close	Check the wiring and air supply to the Gate valve. ***Note:*** *This warning will only clear when the valve has successfully been opened and closed.*
Warning 153.01 Valve Not Open	Check Gate Valve	The foreline gate valve has failed to open	Check the wiring and air supply to the Gate valve. ***Note:*** *This warning will only clear when the valve has successfully been closed and opened.*
Warning 176.01 MB INV xxxx yyyy	xxxx yyyy aaaaaaaaaaaaaaaa	Booster Inverter has raised a warning code.	Refer to A2.3 for more information.
Warning 176.13 No MB Inv Comms	See manual	The pump controller cannot communicate with the booster inverter.	Check the wiring between the pump controller and the booster inverter.
Warning 186.01 DP INV xxxx yyyy	xxxx yyyy aaaaaaaaaaaaaaaa	Dry pump Inverter has raised a warning code.	Refer to A2.3 for more information.
Warning 186.13 No DP Inv Comms	See manual	The pump controller cannot communicate with the dry pump inverter.	Check the wiring between the pump controller and the dry pump inverter.
Warning 196.01 DP Inv xxxx yyyy	Diag aaaa bbbb /zzzzzzzzzzzzzzz	DP 2nd Inverter has raised warning code.	Refer to A2.3 for more information.
Warning 196.01 DP Not Running	See manual	DP 2nd Inverter will not start up when requested.	Check Inverter Fault History.
Warning 196.13 No DP Inv Comms	See manual	The pump controller cannot communicate with the dry pump 2nd inverter.	Check the wiring between the pump controller and the dry pump inverter.
Warning 314.11 Speed Too Low	Stop Pump/Contact Service	The pump rotational speed is at least 30% less than demand for more than 2 minutes.	Stop the pump and perform mechanical check of rotation and beearings.

Notes: 1. *Some of these warnings apply to pump sensors that are only present on certain system variants.*

2. *Some of these warnings apply to accessories and may only be encountered if the particular accessory is fitted.*

© Edwards Limited 2012. All rights reserved.
Edwards and the Edwards logo are trademarks of Edwards Limited.

A2.2 Alarms

The pump controller generates an alarm when a serious problem is encountered.

Depending on the reason for the alarm, the whole system or just the booster (if fitted) will shut down - refer to Section 4.4 and 4.5 for more information about alarms.

If the system has shut down due to an alarm, you must rectify the problem before you try to re-start the pump.

Once the problem that caused the alarm has been resolved, the alarm is cleared by the pump controller.

A2.2.1 LED alarm indicators

Alarms are indicated on the LEDs on the front control panel, the rear panel and on the PDT if fitted.

The alarm LEDs on the front control panel and rear panel illuminate continuously when an alarm is generated.

If a PDT is fitted, the alarm LED flashes to indicate a new alarm. Refer to Appendix A1.3 for more information on how alarms are indicated and how they can be acknowledged using the PDT.

Once all the alarms are cleared, the alarm LEDs extinguish.

A2.2.2 PDT alarms

If a PDT is fitted, each alarm triggers an alarm message to be displayed. Refer to Appendix A1.3 for more information on how alarms are handled by the PDT.

Table A16 lists the alarm messages that might be displayed on the PDT with possible causes and actions you should take.

Table A16 - Alarms

Warning Message on PDT	'Action' Message on PDT	Possible Cause	Action
Alarm 1.01 Stop Activated	-	- The emergency stop has been activated. - There is a fault with the EMS circuit or the EMS link plug has not been fitted or has come disconnected.	If the EMS button has been used on the pump, refer to Section 4.6 to re-set it. Otherwise check and reset the EMS circuit and re-start the pump. ***Note:*** *The alarm message will remain on the display until you restart the pumping system.*
Alarm 1.01 Sys Config Fault	-	The pump system type has not been set properly.	Contact Edwards for a service engineer to configure the pump system type correctly or replace the pump controller electronics.
Alarm 39.12 Exh Press High	Exhaust Blocked Service Pump	The Exhaust pressure has reached maximum allowed.	Refer to Section 4.5 to determine the exhaust pressure that triggered the alarm. See Warning 39.11 for causes and actions.
Alarm 54.12 MB Temp High	See manual	The booster temperature has reached the maximum allowed so the booster has stopped.	Refer to Section 4.5 to determine the temperature that triggered the alarm. See Warning 54.11 for causes and actions.

© Edwards Limited 2012. All rights reserved.
Edwards and the Edwards logo are trademarks of Edwards Limited.

Table A16 - Alarms (continued)

Warning Message on PDT	'Action' Message on PDT	Possible Cause	Action
Alarm 57.12 DP E/C Temp High	See manual	The dry pump end cover temperature has reached the maximum allowed so the system has stopped.	See Warning 57.11 for causes and actions.
Alarm 62.12 MB E/C Temp High	See manual	The booster end cover temperature has reached the maximum allowed so the booster has stopped.	Refer to Section 4.5 to determine the temperature that triggered the alarm. See Warning 62.11 for causes and actions.
Alarm 63.12 DP Temp High	See manual	The dry pump internal temperature has reached the maximum allowed so the system has stopped.	See Warning 63.11 for causes and actions.
Alarm 70.12 DP Temp 2 High	See manual	The dry pump temperature has reached the maximum allowed so the system has stopped.	Refer to Section 4.5 to determine the temperature that triggered the alarm. See Warning 70.11 for causes and actions.
Alarm 84.12 Exh Temp High	See manual	The exhaust pipe temperature has reached the maximum allowed so the system has stopped.	See Warning 84.11 for causes and actions.
Alarm 174.10 Booster Stopped	See manual	Booster speed too low - rotor is probably locked.	Contact Edwards
Alarm 176.01 MB INV xxxx yyyy	xxxx yyyy aaaaaaaaaaaaaaaa	Booster Inverter has raised an alarm and stopped the system.	Refer to A2.3 for more information.
Alarm 176.01 MB Not Running	See manual	Booster Inverter will not start up when requested.	Check inverter fault history.
Alarm 176.13 No MB Inv Comms	See manual	The pump controller cannot communicate with the booster inverter during start-up checks.	Check the wiring between the pump controller and the booster inverter.
Alarm 184.10 Dry Pump Stopped	See manual	The dry pump speed is very low. The rotor might be locked.	Cycle the power to the pump and attempt to re-start. If this fails, contact Edwards.
Alarm 186.01 DP INV xxxx yyyy	xxxx yyyy aaaaaaaaaaaaaaaa	Dry Pump Inverter has raised an alarm and stopped the system.	Refer to A2.3 for more information.
Alarm 186.01 DP Not Running	See manual	Dry Pump Inverter will not start up when requested.	Check inverter fault history.
Alarm 186.13 No DP Inv Comms	See manual	The pump controller cannot communicate with the dry pump inverter during startup checks	Check the wiring between the pump controller and the dry pump inverter
Alarm 196.01 DP Inv xxxx yyyy	Diag aaaa bbbb /zzzzzzzzzzzzzzz	DP 2nd Dry Pump Inverter has raised an alarm and stopped the system.	Refer to A2.3 for more information.
Alarm 196.13 No DP Inv Comms	See manual	The pump controller cannot communicate with the dry pump 2nd inverter.	Check the wiring between the pump controller and the dry pump inverter.
Alarm 314.12 Speed Too Low	Do Not Restart / Contact Service	The pump rotational speed is at least 30% less than demand for more than 3 minutes.	Perform mechanical check of rotation and bearings before attempting to restart.

© Edwards Limited 2012. All rights reserved.
Edwards and the Edwards logo are trademarks of Edwards Limited.

A2.3 Inverter warnings and alarms

The inverters used to drive the dry pump and booster can also generate warnings and alarms if problems are encountered. Inverter warning and alarm codes are displayed by the PDT if fitted.

The alarm and warning codes are each reported as a 16-bit word encoded as 4 hexadecimal numbers. The codes are displayed as follows:

1234 5678

Where:

The first 4 digits signify an Alarm code and,

The second 4 digits signify a Warning code,

Digits 1 – 8 are reported as hexadecimal digits from 0 to F.

To determine the cause of a warning or alarm you must first decode each hexadecimal number. 0 indicates that there is no alert for that bit. Normally you will only see codes of 1, 2, 4 or 8 for each bit but if two or more events occur in the same bit then these will be added together.

For example:

5 = 1 + 4 so if code 5 is displayed it means that alerts 1 AND 4 are active

B = 1 + 2 + 8 so if code B is displayed it means that alerts 1, 2 AND 8 are active.

To decode inverter warning and alarm codes, refer to Table A17 to convert the hexadecimal digits into alert combinations and then refer to Table A18 and A19).

Table A17 - Hexadecimal to digital conversion

BIT SET COMBINATIONS		
HEXADECIMAL	**DECIMAL**	**Combination**
F	15	8+4+2+1
E	14	8+4+2
D	13	8+4+1
C	12	8+4
B	11	8+2+1
A	10	8+2
9	9	8+1
8	8	8
7	7	4+2+1
6	6	4+2
5	5	4+1
4	4	4
3	3	2 + 1
2	2	2
1	1	1

© Edwards Limited 2012. All rights reserved.
Edwards and the Edwards logo are trademarks of Edwards Limited.

Table A18 - Inverter alarm codes

INVERTER ALARMS			
BIT SET	**Fault Code Combination**	**PDT reported fault name**	**Description**
1	8	ACCELERATION_TO	If motor has not accelerated to a minimum speed of 10Hz within 60 secs then drive will try to restart 3 times before giving alarm
	4	OVERLOAD_TO	Alarm given when dry pump speed is below 7Hz for 3 minutes or 30 minutes for a booster
	2	SC_MODE_INTERLOCK	Internal fault contact Edwards
	1	FLASH_DOWNLOAD_ FAULT	Internal fault contact Edwards
2	8	SELF_TEST_FAULT	Inverter diagnostic registers also checked, as per Table A20, and text output as per that table. Self test fault can be because of invalid data value read for address, data rate, un-initialised analogue input channel.
	4	OSTEST _FAULT	Internal fault contact Edwards
	2	EEPROM_FAULT	Inverter diagnostic registers also checked, as per Table A20, and text output as per that table. EEPROM Parameter Upload Incomplete or subsequent EEPROM communication failure.
	1	PWM_TRIP	Inverter output switched off, active when drive not running. Restart pump or cycle power to reset.
3	8	MISSING_PHASE_ TIMEOUT	Indicates a missing input phase - check power connections to pump and fuses in supply. Warning should appear first and then pump trips after 10 minutes.
	4	EMS	EMS has been activated. Check EMS button at front and EMS plug in the back of pump controller.
	2	DESAT_FAULT	Internal fault contact Edwards
	1	UNDERT	Inverter is too cold. See warning register to determine source of problem.
4	8	OVERT	Motor/Drive system over temperature - refer to warning code to determine source. Check cooling.
	4	OVERI	Motor overcurrent
	2	OVERV	Inverter overvoltage
	1	Reserved	Reserved

© Edwards Limited 2012. All rights reserved.
Edwards and the Edwards logo are trademarks of Edwards Limited.

Table A19 - Inverter warnings codes

Inverter warnings			
BIT	**Fault Code Combination**	**Name**	**Description**
5	8	SELFTEST_WARNING	Inverter diagnostic registers also checked, as per Table A20, and text output as per that table.
	4	Reserved	Reserved
	2	LOWTW	Condensation warning, indicates that the inverter (water) temperature is lower than expected – possible causes include inverter water valve stuck open.
	1	HIGHTW	Indicates that the inverter temperature is higher than expected – possible causes include no or low cooling water flow, inverter water valve stuck closed or water pipe to inverter blocked.
6	8	HIGHTC	Controller temperature above upper limit / Controller temperature sensor open circuit - check water supply
	4	HIGHTS	Inverter heat-sink temperature above upper limit / Inverter heat-sink temperature sensor open circuit - check water supply
	2	HIGHTM	Motor temperature above upper limit / Motor temperature sensor open circuit - check water supply
	1	MISSING_PHASE	The loss of one of the three input phases has been detected - check mains supply to drive or blown fuses
7	8	UTCREG	Upper controller temperature regulator active - current limit reduced - check cooling
	4	UTSREG	Upper heat sink temperature regulator active - current limit reduced - check cooling
	2	Reserved	Reserved
	1	LVREG	Lower voltage regulator active - check mains voltage
8	8	LOWVCC	Internal power supply fault - contact Edwards
	4	LOWTC	Low controller temperature - contact Edwards
	2	LOWTS	Low heatsink temperature - contact Edwards
	1	CAN LOSS	Normally due to loss of can bus communication on dual drive system, check usb lead is connected between master and slave drives.

Example:

PDT shows the following:
0108 0200

This translates to:

alarm 1 in bit 2 – PWM_TRIP

alarm 8 in bit 4 – OVERT

warning 2 in bit 6 - HIGHTM.

This means the motor overheated and switched the output off.

© Edwards Limited 2012. All rights reserved.
Edwards and the Edwards logo are trademarks of Edwards Limited.

The following text will be displayed if the condition is SELFTEST_WARNING, SELF_TEST_FAULT_, or EEPROM_FAULT____.

Table A20 - Inverter diagnostic display text

Inverter diagnostic Register 1	Inverter diagnostic Register 2	Text display
0x8000	0x0000	INTERNAL_COMMS__
0x4000	0x0000	P_CHARGE_WARNING
0x2000	0x0000	WATCHDOG_TIMEOUT
0x1000	0x0000	OSTEST_FAULT____
0x0800	0x0000	EEPROM_LOW_VCC__
0x0400	0x0000	EEPROM_WRITEFAIL
0x0200	0x0000	EEPROM_TIMEOUT__
0x0100	0x0000	EEPROM_BYTECOUNT
0x0080	0x0000	FLASH_BOOT_CRC__
0x0040	0x0000	FLASH_WRITE_FAIL
0x0020	0x0000	FLASH_BLOCK_CRC_
0x0010	0x0000	EXTERNAL_RESET__
0x0008	0x0000	SINK_TEMP_FAULT_
0x0004	0x0000	CAL_DATA_INVALID
0x0002	0x0000	EEPROM_BLOCK_CRC
0x0001	0x0000	EEPROM_MAP_ID___
0x0000	0x0200	IGBT_OPEN_CCT___
0x0000	0x0100	MOTOR_OPEN_CCT__
0x0000	0x0010	MOTOR_SHORT_CCT_
0x0000	0x0008	VOLTAGE_SENSOR__
0x0000	0x0004	CURRENT_SENSOR__
0x0000	0x0002	IGBT_OPEN_CCT___
0x0000	0x0001	IGBT_SHORT_CCT__
0x8000	0x0000	INTERNAL_COMMS__
0x4000	0x0000	P_CHARGE_WARNING
0x2000	0x0000	WATCHDOG_TIMEOUT
0x1000	0x0000	OSTEST_FAULT____
0x0800	0x0000	EEPROM_LOW_VCC__

© Edwards Limited 2012. All rights reserved.
Edwards and the Edwards logo are trademarks of Edwards Limited.

This page has been intentionally left blank.

© Edwards Limited 2012. All rights reserved.
Edwards and the Edwards logo are trademarks of Edwards Limited.

A2.4 Other problems

A2.4.1 Pump controller communications

The pump controller contains two processors that perform separate functions. Under normal operation the two processors communicate with each other internally but under fault conditions it is possible that the two processors will stop communicating. The behaviour of the system will depend on its mode of operation prior to the communication failure. There may be no change in operation initially.

To minimise impact on process, the system will continue to run normally if it was already running when the communication failure occurred. The gas valves and Gate valves remain in the state that they were in prior to the communication failure and outputs to the MicroTIM are unaffected. It is important to note, however, that control might be released from the device that was 'in control' (for example PDT) and that stop requests will be ignored from all devices apart from the front panel controls.

To stop a system that has suffered a communication failure either use the EMS or use the front panel controls to 'take control' of the system and then stop it. In this situation, the warning LEDs on the pump will flash, the alarm LED will illuminate and the inlet Gate valve will close. It is not possible to use the Auto or Ramped shut-down modes, the pump will stop immediately without any gas purges. Any requests to start the pump will be rejected until the fault has been rectified. Once the pump has stopped, cycle the power to the pump and attempt to re-start it. Refer to Tables A15 and A16 for actions if any warnings or alarms are generated.

© Edwards Limited 2012. All rights reserved.
Edwards and the Edwards logo are trademarks of Edwards Limited.

This page has been intentionally left blank.

© Edwards Limited 2012. All rights reserved.
Edwards and the Edwards logo are trademarks of Edwards Limited.