PC905

Long Creepage Distance Photocoupler with Built-in Voltage Detection Circuit

❋ Lead forming type (I type) is also available. (**PC905I**)
❋❋ TÜV (DIN-VDE0884) approved type is also available as an option.

■ Features

1. Built-in voltage deviation detection circuit
2. Long creepage distance type
   (Creepage distance : 8mm or more)
3. Conforms to European Safety Standard
   (Internal insulation distance : 0.5mm or more)
4. High collector-emitter voltage(V_{CEO} : 70V)
5. High isolation voltage between input and output (V_{iso} : 5 000V_{rms})
6. Recognized by UL, file No. E64380
   Approved by BSI (BS415 : No. 6990, BS7002 : No. 7567)
   Approved by SEMKO No. 963501101
   Approved by DEMKO No. 392592

■ Applications

1. Switching power supplies

■ Outline Dimensions (Unit : mm)

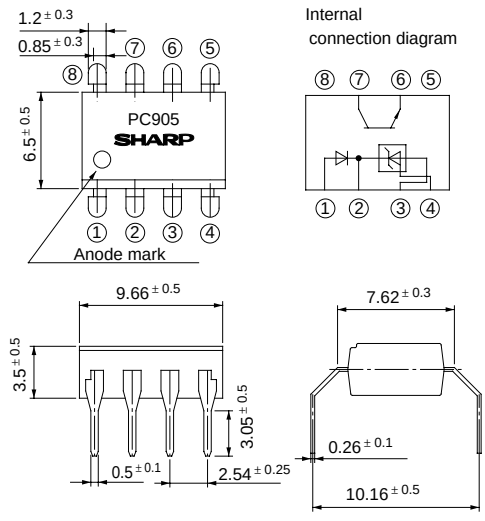

① Anode ⑤ NC
② Cathode ⑥ Emitter
③ GND ⑦ Collector
④ Reference ⑧ NC

■ Absolute Maximum Ratings (Ta= 25˚C)

Parameter		Symbol	Rating	Unit
Input	Anode current	I_A	50	mA
	Anode voltage	V_A	30	V
	Reference input current	I_{REF}	10	mA
	Power dissipation	P	250	mW
Output	Collector-emitter voltage	V_{CEO}	70	V
	Emitter-collector voltage	V_{ECO}	6	V
	Collector current	I_C	50	mA
	Collector power dissipation	P_C	150	mW
Total power dissipation		P_{tot}	350	mW
*1Isolation voltage		V_{iso}	5 000	V_{rms}
Operating temperature		T_{opr}	- 25 to + 85	˚C
Storage temperature		T_{stg}	- 40 to + 125	˚C
*2Soldering temperature		T_{sol}	260	˚C

*1 40 to 60% RH, AC for 1 minute
*2 For 10 seconds

" In the absence of confirmation by device specification sheets, SHARP takes no responsibility for any defects that occur in equipment using any of SHARP's devices, shown in catalogs, data books, etc. Contact SHARP in order to obtain the latest version of the device specification sheets before using any SHARP's device. "

■ Electro-optical Characteristics

(Ta= 25˚C unless otherwise specified.)

Parameter		Symbol	Conditions	MIN.	TYP.	MAX.	Unit	Fig.
Input	Reference voltage	V_{REF}	$V_K = V_{REF}$, I_A = 10mA	2.40	2.495	2.60	V	1
	*3 Temperature change in reference voltage	V_{REF}(dev)	$V_K = V_{REF}$, I_A = 10mA, Ta= - 25 to + 85˚C	-	8	40	mV	1
	Voltage variation ratio in reference voltage	$\Delta V_{REF} / \Delta V_A$	I_A = 10mA, ΔV_A = 30V- V_{REF}	-	- 1.4	- 5	mV/V	2
	Reference input current	I_{REF}	I_A = 10mA, R_3 = 10kΩ	-	2	10	μA	3
	*4 Temperature change in reference input current	I_{REF}(dev)	I_A = 10mA, R_3 = 10kΩ, Ta= - 25 to + 85˚C	-	0.4	3	μA	3
	Minimum drive current	I_{MIN}	$V_K = V_{REF}$	-	1	2	mA	1
	OFF-state anode current	I_{OFF}	V_A = 30V, V_{REF} = GND	-	0.1	2	μA	4
	Anode-cathode forward voltage	V_F	$V_K = V_{REF}$, I_A = 10mA	-	1.2	1.4	V	1
Output	Collector dark current	I_{CEO}	V_{CE} = 20V	-	10^{-9}	10^{-7}	A	5
Transfer charac-teristics	*5 Current transfer ratio	CTR	$V_K = V_{REF}$, I_A = 10mA, V_{CE} = 5V	40	-	320	%	6
	Collector-emitter saturation voltage	V_{CE}(sat)	$V_K = V_{REF}$, I_A = 20mA, I_C = 1mA	-	0.1	0.2	V	6
	Isolation resistance	R_{ISO}	40 to 60% RH, DC500V	5×10^{10}	1×10^{11}	-	Ω	-
	Floating capacitance	C_f	V= 0, f= 1MHz	-	0.6	1.0	pF	-

*3 V_{REF}(dev) = $V_{REF(MAX.)}$ - $V_{REF(MIN.)}$
*4 I_{REF}(dev) = $I_{REF(MAX.)}$ - $I_{REF(MIN.)}$
*5 CTR = I_C / I_A x 100(%)

■ Test Circuit

Fig. 1

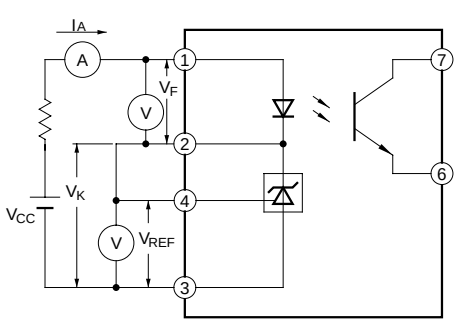

V_K : Voltage between terminals ② and ③

V_{REF} : Voltage between terminals ③ and ④

Fig. 2

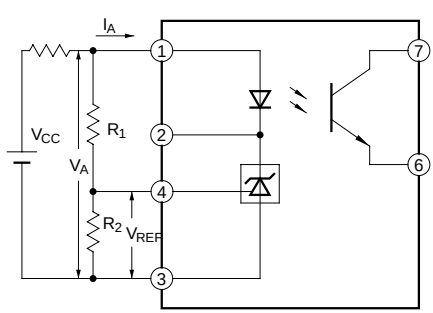

Fig. 3

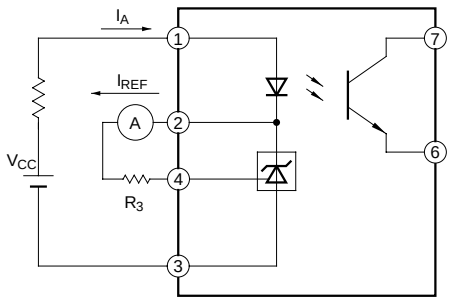

Fig. 4

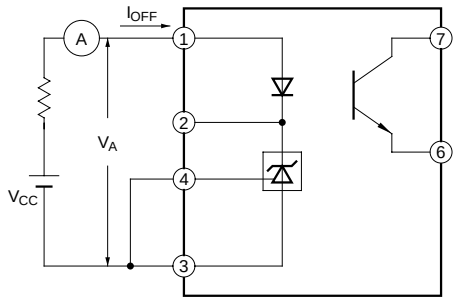

Fig. 5

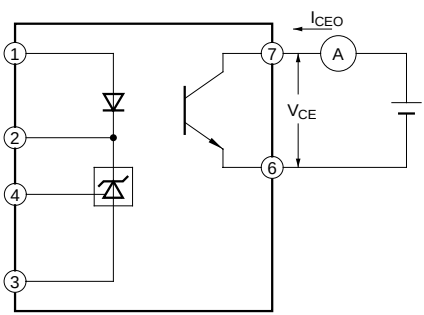

Fig. 6

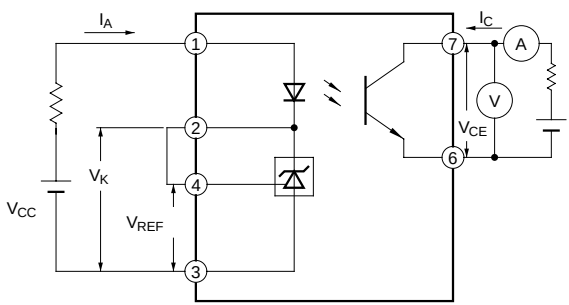

Fig. 7 Anode Current vs. Ambient Temperature

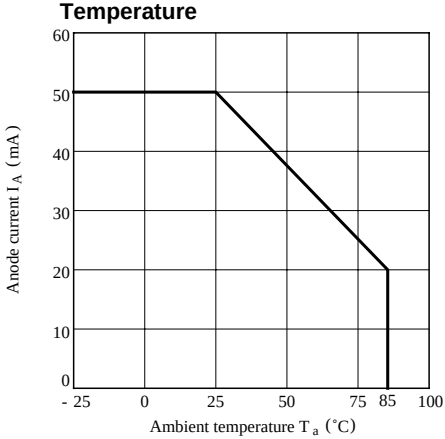

Fig. 8 Input Power Dissipation vs. Ambient Temperature

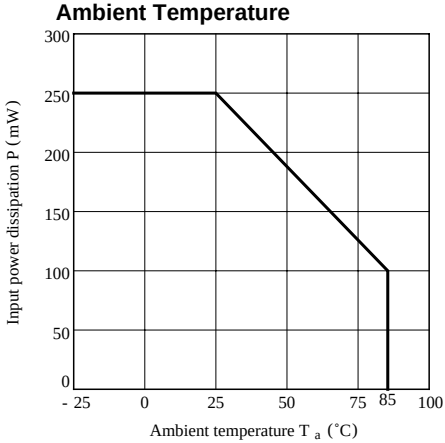

Fig. 9 Collector Power Dissipation vs. Ambient Temperature

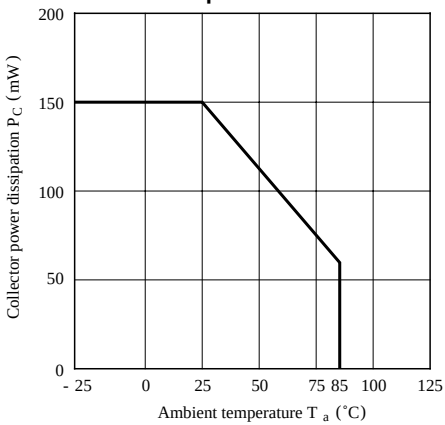

Fig.10 Power Dissipation vs. Ambient Temperature

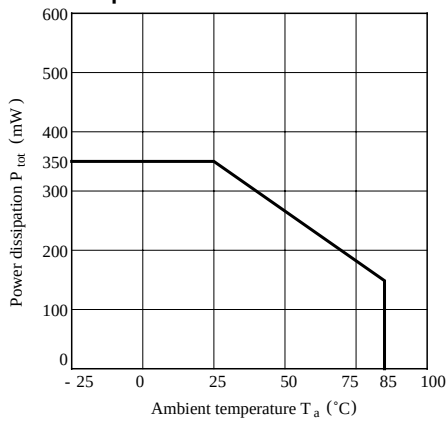

Fig.11 Relative Current Transfer Ratio vs. Ambient Temperature

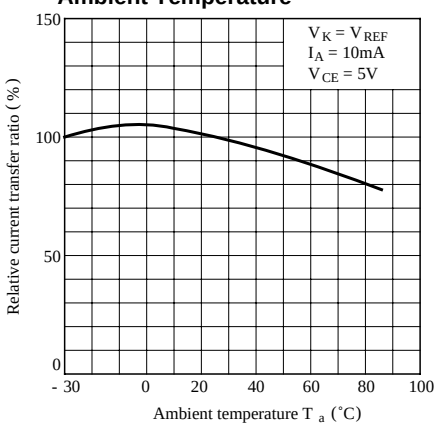

Fig.12 Collector Dark Current vs. Ambient Temperature

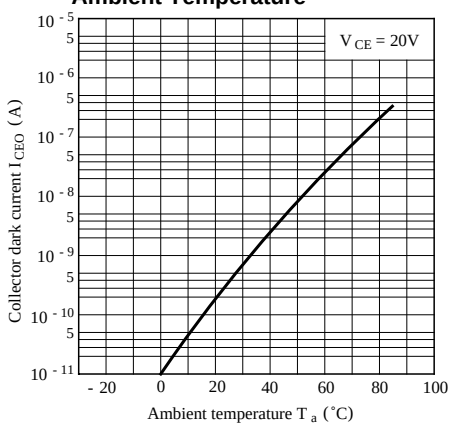

Fig.13-a Anode Current vs. Reference Voltage

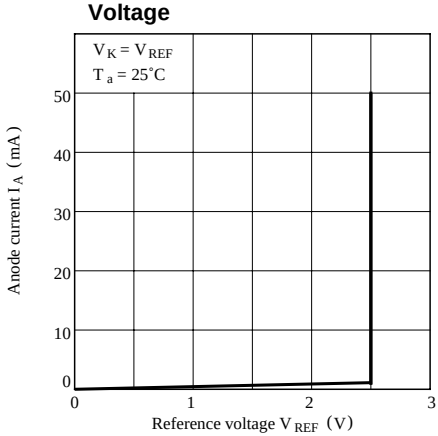

Fig.13-b Anode Current vs. Reference Voltage

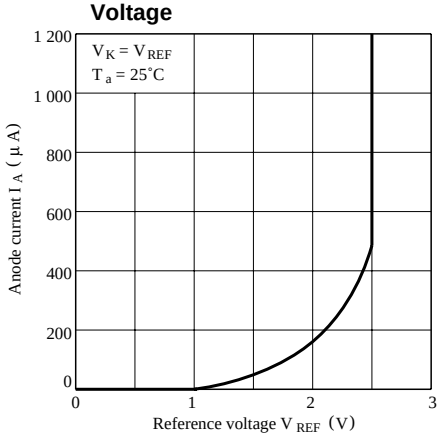

Fig.14 OFF-state Anode Current vs. Ambient Temperature

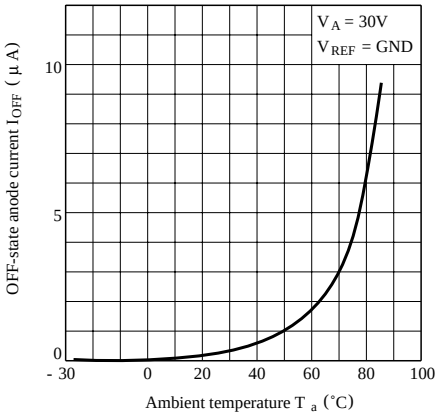

Fig.15 Reference Voltage vs. Ambient Temperature

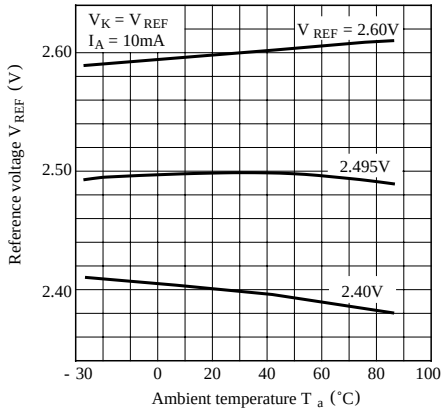

Fig.16 Reference Input Current vs. Ambient Temperature

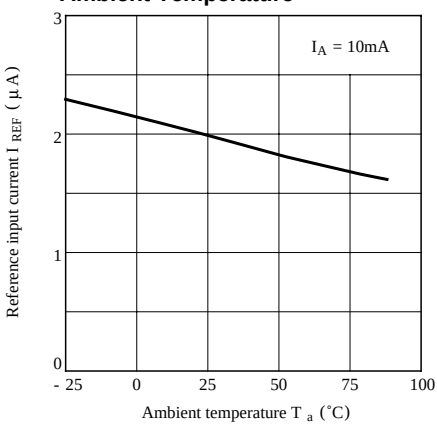

Fig.17 Reference Voltage Change vs. Anode Voltage

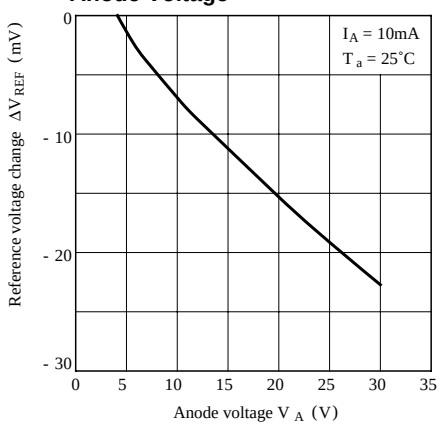

Fig.18-a Voltage Gain (1) vs. Frequency

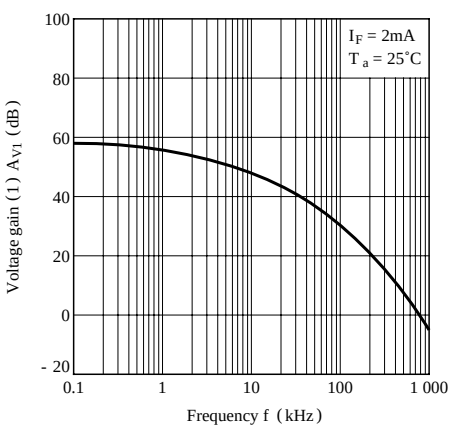

Test Circuit for Voltage Gain (1) vs. Frequency

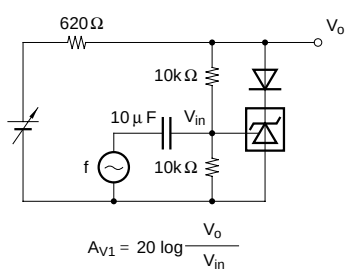

Fig.18-b Voltage Gain (2) vs. Frequency

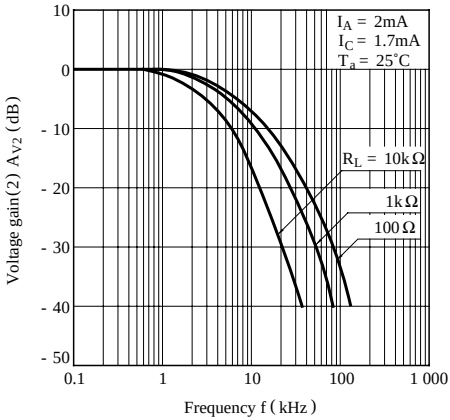

Test Circuit for Voltage Gain (2) vs. Frequency

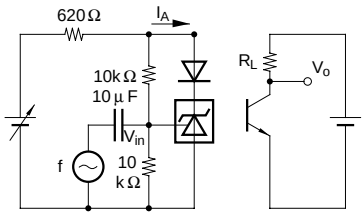

Fig.19 Anode Current vs. Load Capacitance

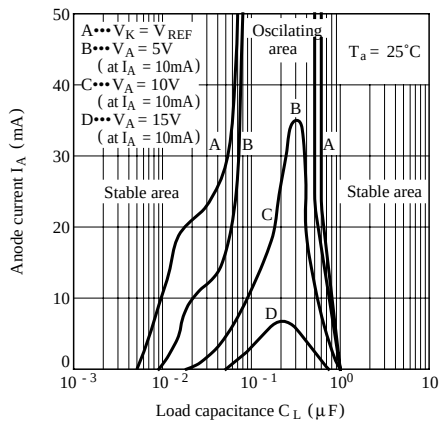

Test Circuit for Anode Current vs. Load Capacitance

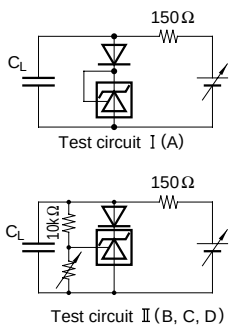

Fig.20 Collector-emitter Saturation Voltage vs. Ambient Temperature

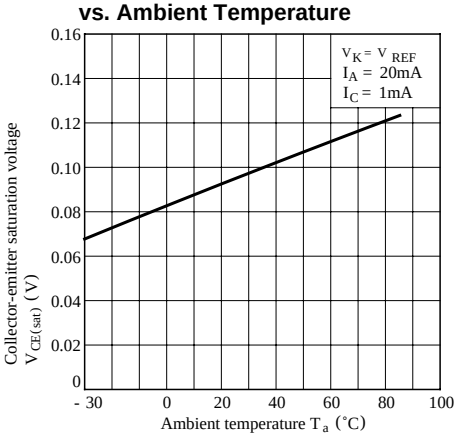

Fig.21 Current Transfer Ratio vs. Anode Current

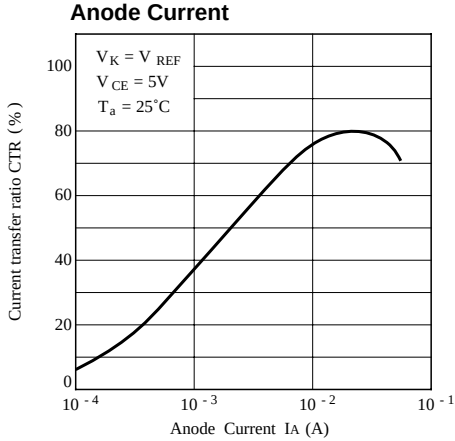

■ Precautions for Use

Handle this product the same as with other integrated circuits against static electricity.

● As for other general cautions, refer to the chapter "Precautions for Use"